PRODUCT INFORMATION

IMF

THE ECONOMIC STANDARD FOR USE IN THE FOOD INDUSTRY

Inductive Proximity Sensors

SICK
Sensor Intelligence.

Achieving reliable results even under difficult conditions is particularly important in food production and processing applications, chiefly because the standard requirements of process and factory automation must be taken into account. While the use of rugged materials and the capacity for thorough cleaning are the main priorities for process automation, high levels of accuracy, rapid response times, straightforward commissioning, and the option to run diagnostics on sensors remotely are key factors within factory automation.

Protected against water

- IP 68 and IP 69K enclosure rating due to sealing concept

Wide temperature range

- Digital temperature compensation with SICK-ASIC technology

Mechanically rugged

- High tightening torque and strength due to stainless steel housing

Safe food production

- Use of FDA-conform materials

Resistant against cleaning agents

- ECOLAB-certified resistance to all common cleaning agents

Corrosion resistant

- Long-lasting due to 316L stainless steel housing

Visual installation aid

- LED indicates when the secured sensing range has been reached

IO-Link compatible

- Option of communicating via IO-Link 1.0

8019110/2016-01-15
Irrtümer und Änderungen vorbehalten

LOW MAINTANANCE IN WASHDOWN ENVIRONMENTS

The IMF inductive proximity sensor covers all options by delivering maximum automation performance while also complying with the demands of the food industry. Extended, highly accurate sensing ranges mean that reliable switching behavior is guaranteed, even in the event of dramatic changes in temperature. The materials used – including stainless steel and LCP – have been approved by the FDA and the sensor is certified by Ecolab. The IMF is extremely watertight, boasting enclosure ratings IP 68 and IP 69K, and the option of communication via IO-Link opens up new opportunities for configuration and diagnostics.

Determining positions in wet areas

In piping systems within automated plants, valve clusters provide a number of options for coupling pipes in different ways. Filling and emptying processes can be carried out without having to manually reconnect to coupling panels. Two IMF inductive proximity sensors detect the position of the globe valves.

Coupling panels are used in storage tanks within the beverage industry to control the product flow, and they connect pipes together. The IMF inductive proximity sensor is used to detect the position of the coupling bend.

One popular method of fulfilling the strict hygiene standards that apply in this context is to clean the systems using high pressure on a daily basis – this means that the individual components are exposed to strong thermal and mechanical loads as well as chemically aggressive cleaning agents, which poses a real challenge to the sensors in place.

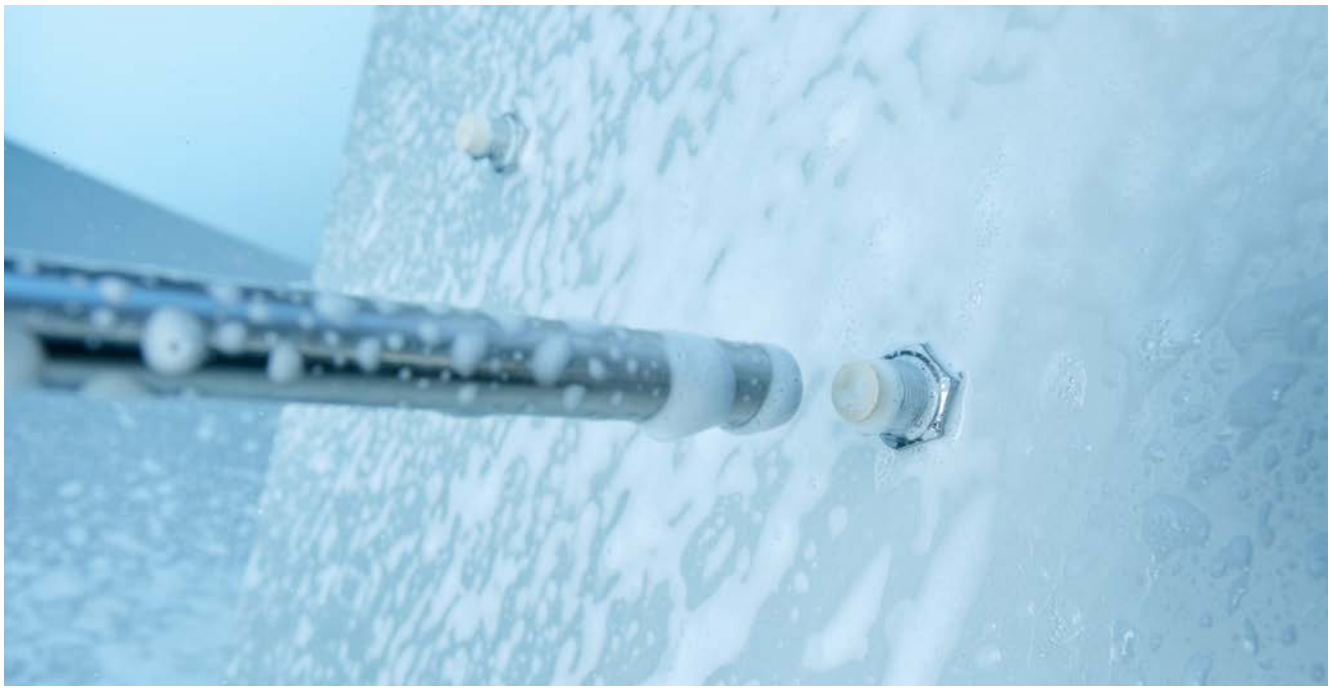

It is particularly important in the splash zone (cleaning zone/washdown) that wet cleaning can be completed quickly and effectively – and that there is very little, if any, residue (food, cleaning agents, or water) left on the surfaces during the cleaning process. It must therefore be ensured that sensors in the splash zone are rugged enough to be exposed to cleaning agents and high-pressure cleaning – no problem at all for the IMF.

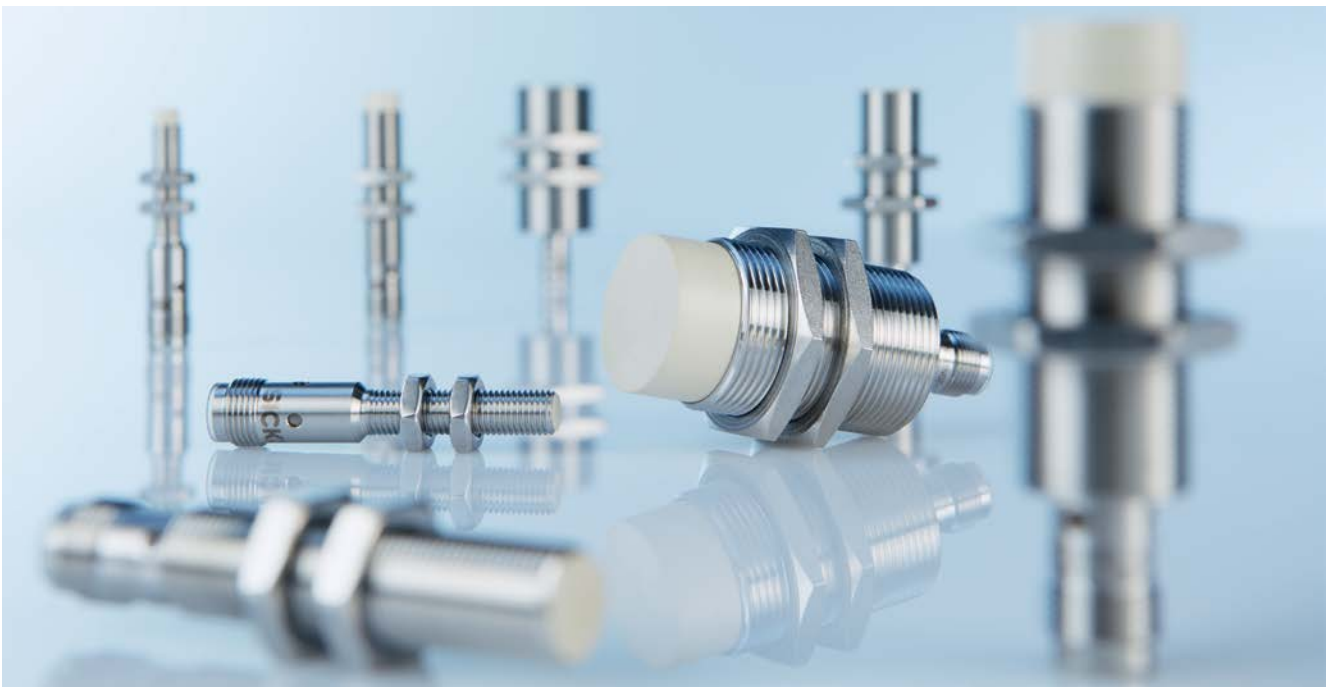

The IMF is available in sizes M8 to M30.

SICK – WE HAVE UNDERSTOOD

In addition to their high performance, the inductive sensors by SICK are simply perfect all-rounders. Global availability, optimum delivery performance and a large portfolio characterize the inductive sensors – and make SICK the right partner.

If the right sensor is not available despite the large product range, customizations provide an even higher degree of flexibility. Our aim is give you the right sensor for your application – at the right time.

Even when it is a tricky task. Thanks to a global support network in over 88 countries, SICK can always work with you to find a solution.

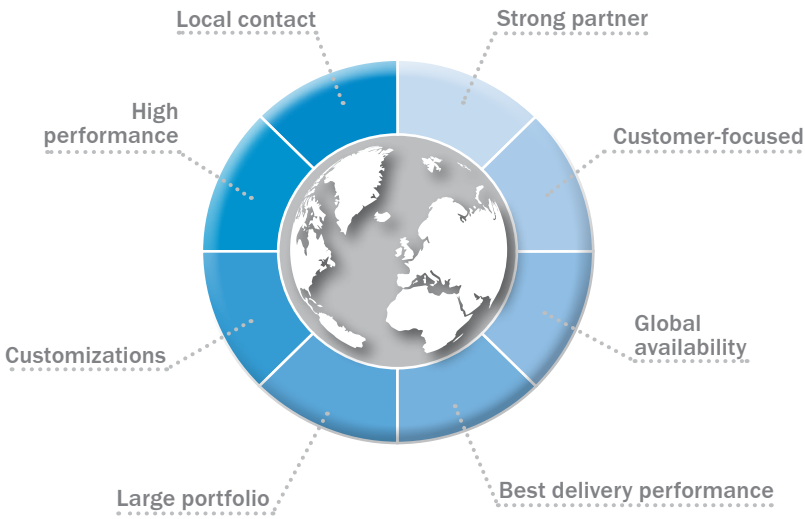

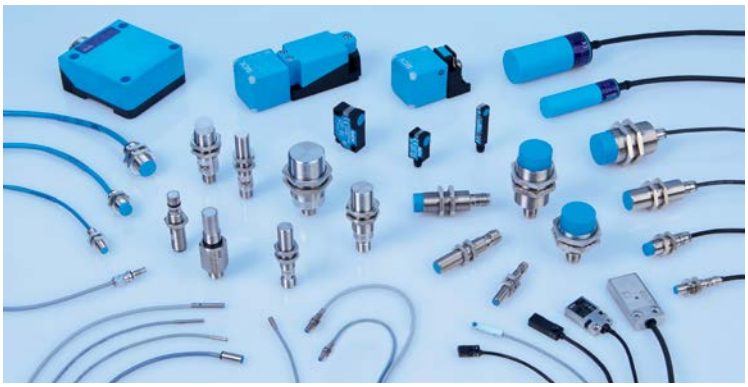

As a major player in automation technology, partnership with SICK offers a variety of benefits. We are committed to driving innovation in the industry, even in areas neglected by others – and we want to do this on a global scale in all sectors. Our global network of production plants with unified quality standards guarantees a safe and reliable supply. Our elaborate logistics concept ensures rapid availability on site, regardless of which of our over 40,000 products you require. The individual needs of our customers are paramount to SICK.

Our local sales department will advise and support you with your automation projects. Together with our regional development and competence centers, we will always create a solution which adds value for our customers.

The IMF is available with the following sensing ranges:

Product	Sensing range (mm)	Page
M08 flush	2 mm	8
M08 non-flush	4 mm	8
M12 flush	4 mm	12
M12 non-flush	8 mm	12
M18 flush	8 mm	16
M18 non-flush	12 mm	16
M30 flush	15 mm	20
M30 non-flush	20 mm	20

THE ECONOMIC STANDARD FOR USE IN THE FOOD INDUSTRY

Product description

The IMF inductive proximity sensor is the new standard for reliability in the food industry. With its extended sensing ranges, made highly precise thanks to the use of SICK ASIC technology, the IMF ensures reliable, stable processes. What's more, its wide-ranging specification limits allow the IMF to be used in all areas of food production: a huge benefit when it comes to product selection and warehousing. The visual adjustment indicator saves time during commissioning and helps cut down on errors. Communication via IO-Link is also possible, creating more flexibility and adding more functions for automation applications. With an extensive standard product portfolio available, even special devices can be put into action quickly and easily.

At a glance

- Types M8
- Extended sensing ranges: 2 mm ... 4 mm
- Electrical configuration: DC 3- and 4-wire
- Enclosure rating: IP 68, IP 69K
- Temperature range: −40 °C ... 100 °C
- FDA-approved stainless steel housing (V4A) and active sensing face made of plastic (LCP)
- Visual adjustment indicator, IO-Link-ready
- Resistant to industrial cleaning agents, Ecolab-certified

Your benefits

- Stable processes thanks to extended, highly precise sensing ranges enabled through the use of SICK ASIC technology
- Reduced machine downtimes thanks to a longer service life, even when subjected to frequent cleaning cycles
- Quick and easy installation thanks to the visual adjustment indicator
- High degree of flexibility and communication options thanks to IO-Link
- Easy to implement customer-specific variants thanks to a modular concept

Additional information

Detailed technical data 7
Ordering information 8
Dimensional drawings 8
Connection diagram 8
Installation note 9
Installation aid 9
Response curve 9

➜ www.mysick.com/en/IMF08

For more information, simply enter the link or scan the QR code and get direct access to technical data, CAD design models, operating instructions, software, application examples, and much more.

8019110/2016-01-15
Subject to change without notice

Detailed technical data

Features

	Flush	Non-flush
Housing	Cylindrical	
Thread size	M8 x 1	
Sensing range S_n	2 mm	4 mm
Safe sensing range S_a	1.62 mm	3.24 mm
Installation type	Flush	Non-flush
Switching frequency	4,000 Hz	
Output type	PNP / NPN (depending on type)	
Output function	NO / NC / Complementary (depending on type)	
Electrical wiring	DC 3-wire / DC 4-wire (depending on type)	
Enclosure rating	IP 68 [1] IP 69K [2]	
Special features	Suitable for use in the food industry, Resistant to cleaning agents Capable of communication via IO-Link 1.0	

[1] According to EN 60529.
[2] According to ISO 20653:2013-03.

Mechanics/electronics

Supply voltage	10 V DC ... 30 V DC
Ripple	≤ 10 %
Voltage drop	≤ 2 V
Current consumption [2]	≤ 10 mA
Hysteresis	3 % ... 20 %
Repeatability [3] [4]	≤ 2 %
Temperature drift (of S_r)	± 10 %
EMC	According to EN 60947-5-2
Continuous current I_a	≤ 200 mA
Connection type [5]	Male connector, M12
Short-circuit protection	✔
Reverse polarity protection	✔
Power-up pulse protection	✔
Shock and vibration resistance	100 g / 11 ms / 1000 cycles; 150 g / 1 Mio cycles; 10 Hz ... 55 Hz, 1 mm / 55 z ... 500 Hz / 15 g
Ambient operating temperature	–40 °C ... +100 °C
Housing material	V4A (1.4404, AISI 316L)
Sensing face material	Plastic, LCP (FDA certified)
Tightening torque, max. [6]	Typ. 14 Nm

[1] At I_a max.
[2] Without load.
[3] Ub and Ta constant.
[4] Of Sr.
[5] With gold plated contact pins.
[6] Valid if toothed side of nut is used.

Reduction factors

	Flush	Non-flush
Note	The values are reference values which may vary	
Stainless steel (V2A, 304)	Approx. 0.74	Approx. 0.69
Aluminum (Al)	Approx. 0.43	Approx. 0.37
Copper (Cu)	Approx. 0.33	Approx. 0.28
Brass (Br)	Approx. 0.46	Approx. 0.4

Ordering information

Other models ➔ www.mysick.com/en/IMF08

- **Connection:** male connector, M12, 4-pin

Installation type	Sensing range S_n	Electrical wiring	Output type	Output function	IO-Link	Connection diagram	Type	Part no.
Flush	≤ 2 mm	DC 3-wire	NPN	NO	–	Cd-007	IMF08-02BNSNC0S	1076749
			PNP	NC	–	Cd-008	IMF08-02BPONC0S	1076747
				NO	✔	Cd-007	IMF08-02BPSNC0S	1076745
		DC 4-wire	PNP	Complementary	✔	Cd-006	IMF08-02BPPNC0S	1076748
Non-flush	≤ 4 mm	DC 3-wire	NPN	NO	–	Cd-007	IMF08-04NNSNC0S	1076753
			PNP	NC	–	Cd-008	IMF08-04NPONC0S	1076751
				NO	✔	Cd-007	IMF08-04NPSNC0S	1076750
		DC 4-wire	PNP	Complementary	✔	Cd-006	IMF08-04NPPNC0S	1076752

Dimensional drawings (Dimensions in mm (inch))

IMF08, flush

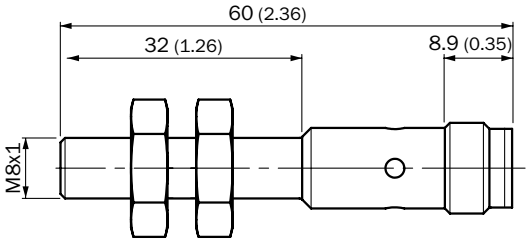

IMF08, non flush

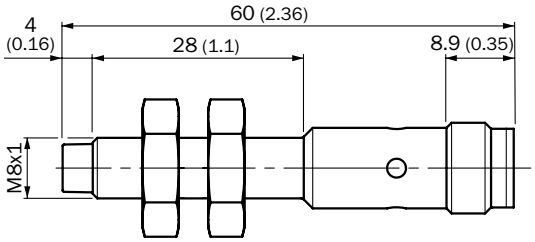

Connection diagram

Cd-006

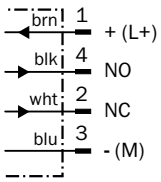

Cd-007

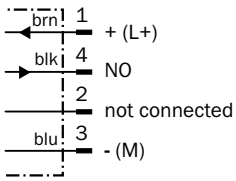

Cd-008

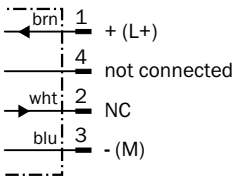

8019110/2016-01-15

Installation note

Flush installation

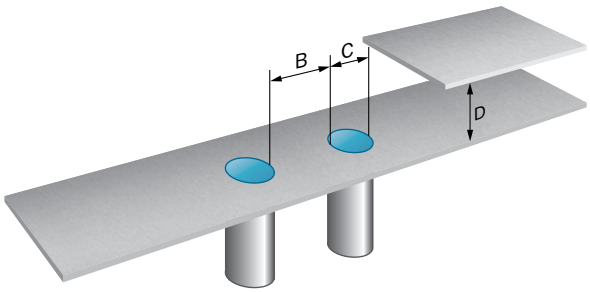

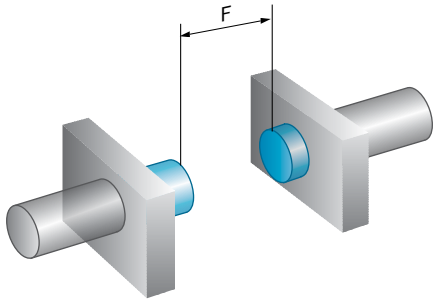

Non-flush installation

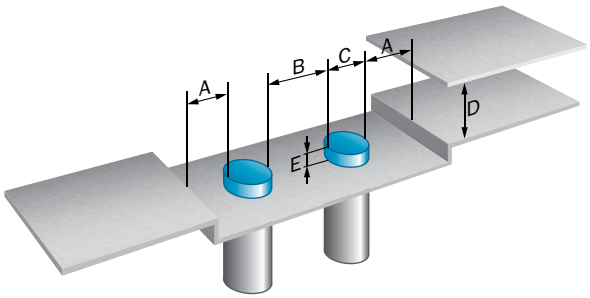

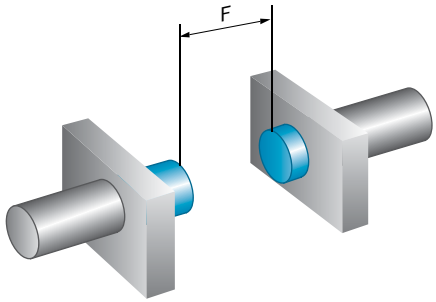

	Installation type	Sensing range Sn	A	B	C	D	E	F
IMF08-02Bxxxxxx	Flush	2 mm	-	6.5 mm	8 mm	6 mm	-	16 mm
IMF08-04Nxxxxxx	Non-flush	4 mm	8 mm	18 mm	8 mm	12 mm	8 mm	32 mm

Installation aid

Normally open

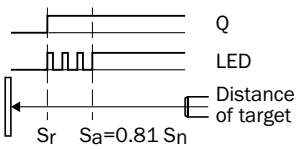

Normally closed

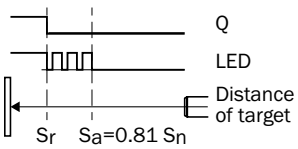

Response curve

Flush installation

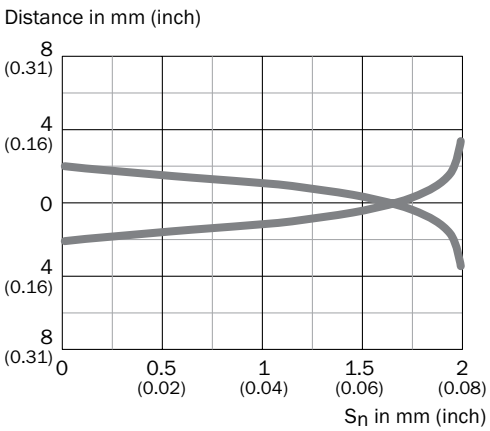

Non-flush installation

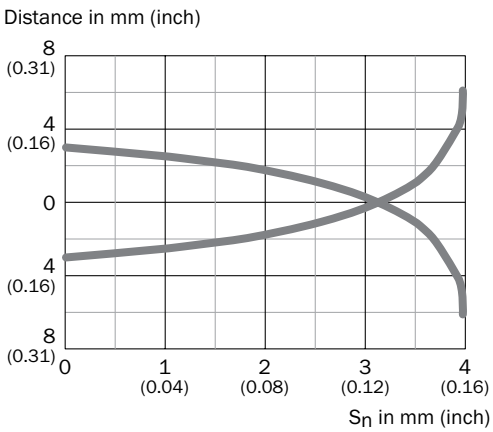

THE ECONOMIC STANDARD FOR USE IN THE FOOD INDUSTRY

Product description

The IMF inductive proximity sensor is the new standard for reliability in the food industry. With its extended sensing ranges, made highly precise thanks to the use of SICK ASIC technology, the IMF ensures reliable, stable processes. What's more, its wide-ranging specification limits allow the IMF to be used in all areas of food production: a huge benefit when it comes to product selection and warehousing. The visual adjustment indicator saves time during commissioning and helps cut down on errors. Communication via IO-Link is also possible, creating more flexibility and adding more functions for automation applications. With an extensive standard product portfolio available, even special devices can be put into action quickly and easily.

At a glance

- Types M12
- Extended sensing ranges: 4 mm ... 8 mm
- Electrical configuration: DC 3- and 4-wire
- Enclosure rating: IP 68, IP 69K
- Temperature range: −40 °C ... 100 °C
- FDA-approved stainless steel housing (V4A) and active sensing face made of plastic (LCP)
- Visual adjustment indicator, IO-Link-ready
- Resistant to industrial cleaning agents, Ecolab-certified

Your benefits

- Stable processes thanks to extended, highly precise sensing ranges enabled through the use of SICK ASIC technology
- Reduced machine downtimes thanks to a longer service life, even when subjected to frequent cleaning cycles
- Quick and easy installation thanks to the visual adjustment indicator
- High degree of flexibility and communication options thanks to IO-Link
- Easy to implement customer-specific variants thanks to a modular concept

Additional information

Detailed technical data 11
Ordering information 12
Dimensional drawings 12
Connection diagram. 12
Installation note 13
Installation aid 13
Response curve 13

➜ www.mysick.com/en/IMF12

For more information, simply enter the link or scan the QR code and get direct access to technical data, CAD design models, operating instructions, software, application examples, and much more.

8019110/2016-01-15
Subject to change without notice

Detailed technical data

Features

	Flush	Non-flush
Housing	Cylindrical	
Thread size	M12 x 1	
Sensing range S_n	4 mm	8 mm
Safe sensing range S_a	3.24 mm	6.48 mm
Installation type	Flush	Non-flush
Switching frequency	2,000 Hz	
Output type	PNP / NPN (depending on type)	
Output function	NO / NC / Complementary (depending on type)	
Electrical wiring	DC 3-wire / DC 4-wire (depending on type)	
Enclosure rating	IP 68 [1] IP 69K [2]	
Special features	Suitable for use in the food industry, Resistant to cleaning agents Capable of communication via IO-Link 1.0	

[1] According to EN 60529.
[2] According to ISO 20653:2013-03.

Mechanics/electronics

Supply voltage	10 V DC ... 30 V DC
Ripple	≤ 10 %
Voltage drop	≤ 2 V
Current consumption [2]	≤ 10 mA
Hysteresis	3 % ... 20 %
Repeatability [3] [4]	≤ 2 %
Temperature drift (of S_r)	± 10 %
EMC	According to EN 60947-5-2
Continuous current I_a	≤ 200 mA
Connection type [5]	Male connector, M12
Short-circuit protection	✔
Reverse polarity protection	✔
Power-up pulse protection	✔
Shock and vibration resistance	100 g / 2 ms / 500 cycles; 150 g / 1 Mio cycles; 10 Hz ... 55 Hz / 1 mm; 55 Hz ... 500 Hz / 60 g
Ambient operating temperature	–40 °C ... +100 °C
Housing material	V4A (1.4404, AISI 316L)
Sensing face material	Plastic, LCP (FDA certified)
Tightening torque, max. [6]	Typ. 32 Nm
Protection class [7]	II

[1] At I_a max.
[2] Without load.
[3] Ub and Ta constant.
[4] Of Sr.
[5] With gold plated contact pins.
[6] Valid if toothed side of nut is used.
[7] Reference voltage DC 50 V.

Reduction factors

	Flush	Non-flush
Note	The values are reference values which may vary	
Stainless steel (V2A, 304)	Approx. 0.65	Approx. 0.67
Aluminum (Al)	Approx. 0.35	Approx. 0.42
Copper (Cu)	Approx. 0.24	Approx. 0.35
Brass (Br)	Approx. 0.38	Approx. 0.42

Ordering information

Other models ➔ www.mysick.com/en/IMF12

- **Connection:** male connector, M12, 4-pin

Installation type	Sensing range S_n	Electrical wiring	Output type	Output function	IO-Link	Connection diagram	Type	Part no.
Flush	≤ 4 mm	DC 3-wire	NPN	NO	–	Cd-007	IMF12-04BNSNC0S	1076671
			PNP	NC	–	Cd-008	IMF12-04BPONC0S	1076670
				NO	✔	Cd-007	IMF12-04BPSNC0S	1076673
		DC 4-wire	PNP	Complementary	✔	Cd-006	IMF12-04BPPNC0S	1076674
Non-flush	≤ 8 mm	DC 3-wire	NPN	NO	–	Cd-007	IMF12-08NNSNC0S	1076677
			PNP	NC	–	Cd-008	IMF12-08NPONC0S	1076676
				NO	✔	Cd-007	IMF12-08NPSNC0S	1076675
		DC 4-wire	PNP	Complementary	–	Cd-006	IMF12-08NPPNC0S	1076678

Dimensional drawings (Dimensions in mm (inch))

IMF12, flush

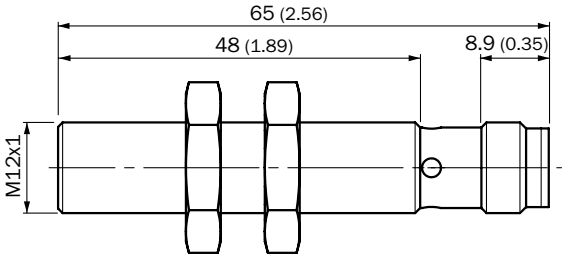

IMF12, non flush

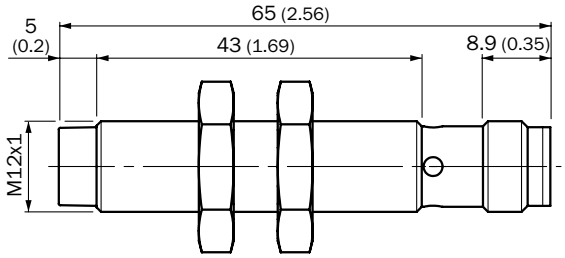

Connection diagram

Cd-006

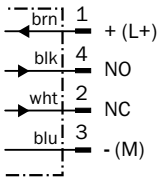

Cd-007

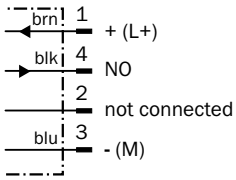

Cd-008

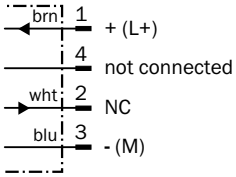

Installation note

Flush installation

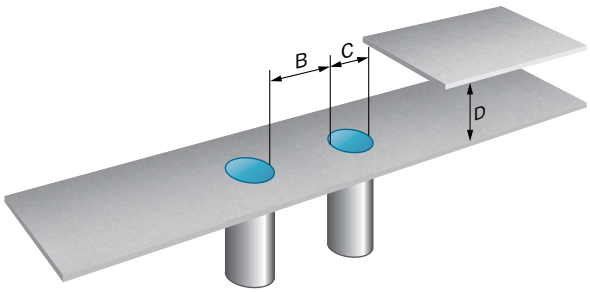

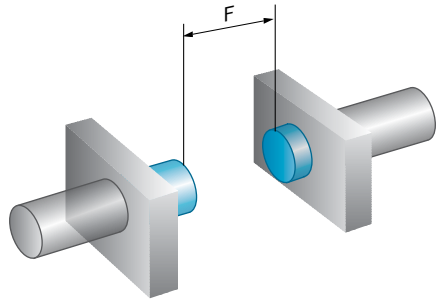

Non-flush installation

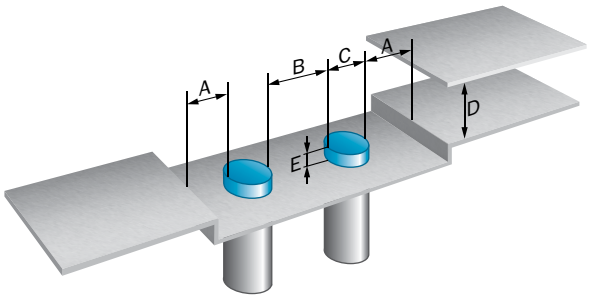

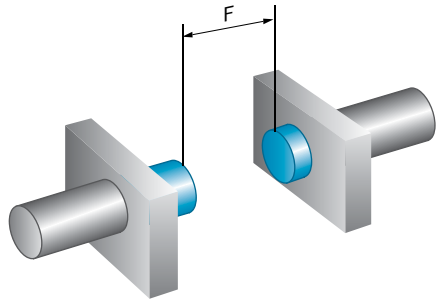

	Installation type	Sensing range Sn	A	B	C	D	E	F
IMF12-04Bxxxxxx	Flush	4 mm	-	12 mm	12 mm	12 mm	-	32 mm
IMF12-08Nxxxxxx	Non-flush	8 mm	12 mm	24 mm	12 mm	24 mm	16 mm	64 mm

Installation aid

Normally open

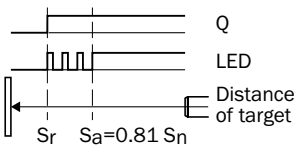

Normally closed

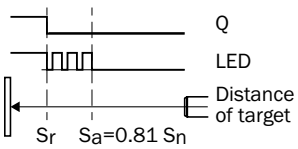

Response curve

Flush installation

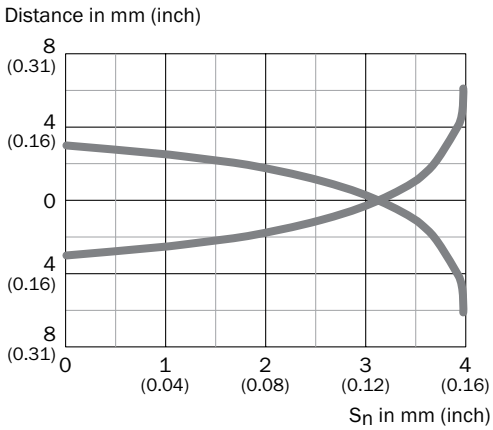

Non-flush installation

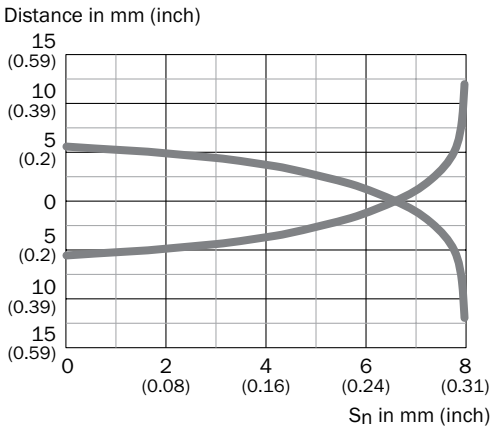

THE ECONOMIC STANDARD FOR USE IN THE FOOD INDUSTRY

Product description

The IMF inductive proximity sensor is the new standard for reliability in the food industry. With its extended sensing ranges, made highly precise thanks to the use of SICK ASIC technology, the IMF ensures reliable, stable processes. What's more, its wide-ranging specification limits allow the IMF to be used in all areas of food production: a huge benefit when it comes to product selection and warehousing. The visual adjustment indicator saves time during commissioning and helps cut down on errors. Communication via IO-Link is also possible, creating more flexibility and adding more functions for automation applications. With an extensive standard product portfolio available, even special devices can be put into action quickly and easily.

At a glance

- Types M18
- Extended sensing ranges: 8 mm ... 12 mm
- Electrical configuration: DC 3- and 4-wire
- Enclosure rating: IP 68, IP 69K
- Temperature range: −40 °C ... 100 °C
- FDA-approved stainless steel housing (V4A) and active sensing face made of plastic (LCP)
- Visual adjustment indicator, IO-Link-ready
- Resistant to industrial cleaning agents, Ecolab-certified

Your benefits

- Stable processes thanks to extended, highly precise sensing ranges enabled through the use of SICK ASIC technology
- Reduced machine downtimes thanks to a longer service life, even when subjected to frequent cleaning cycles
- Quick and easy installation thanks to the visual adjustment indicator
- High degree of flexibility and communication options thanks to IO-Link
- Easy to implement customer-specific variants thanks to a modular concept

Additional information

Detailed technical data 15
Ordering information 16
Dimensional drawings 16
Connection diagram. 16
Installation note 17
Installation aid 17
Response curve 17

➜ www.mysick.com/en/IMF18

For more information, simply enter the link or scan the QR code and get direct access to technical data, CAD design models, operating instructions, software, application examples, and much more.

8019110/2016-01-15
Subject to change without notice

Detailed technical data

Features

	Flush	Non-flush
Housing	Cylindrical	
Thread size	M18 x 1	
Sensing range S_n	8 mm	12 mm
Safe sensing range S_a	6.48 mm	9.72 mm
Installation type	Flush	Non-flush
Switching frequency	1,000 Hz	
Output type	PNP / NPN (depending on type)	
Output function	NO / NC / Complementary (depending on type)	
Electrical wiring	DC 3-wire / DC 4-wire (depending on type)	
Enclosure rating	IP 68 [1] IP 69K [2]	
Special features	Suitable for use in the food industry, Resistant to cleaning agents Capable of communication via IO-Link 1.0	

[1] According to EN 60529.
[2] According to ISO 20653:2013-03.

Mechanics/electronics

Supply voltage	10 V DC ... 30 V DC
Ripple	≤ 10 %
Voltage drop	≤ 2 V
Current consumption [2]	≤ 10 mA
Hysteresis	3 % ... 20 %
Repeatability [3] [4]	≤ 2 %
Temperature drift (of S_r)	± 10 %
EMC	According to EN 60947-5-2
Continuous current I_a	≤ 200 mA
Connection type [5]	Male connector, M12
Short-circuit protection	✔
Reverse polarity protection	✔
Power-up pulse protection	✔
Shock and vibration resistance	100 g / 2 ms / 500 cycles; 150 g / 1 Mio cycles; 10 Hz ... 55 Hz / 1 mm; 55 Hz ... 500 Hz / 60 g
Ambient operating temperature	–40 °C ... +100 °C
Housing material	V4A (1.4404, AISI 316L)
Sensing face material	Plastic, LCP (FDA certified)
Tightening torque, max. [6]	Typ. 90 Nm
Protection class [7]	II

[1] At I_a max.
[2] Without load.
[3] Ub and Ta constant.
[4] Of Sr.
[5] With gold plated contact pins.
[6] Valid if toothed side of nut is used.
[7] Reference voltage DC 50 V.

Reduction factors

	Flush	Non-flush
Note	The values are reference values which may vary	
Stainless steel (V2A, 304)	Approx. 0.55	Approx. 0.7
Aluminum (Al)	Approx. 0.24	Approx. 0.43
Copper (Cu)	Approx. 0.19	Approx. 0.37
Brass (Br)	Approx. 0.24	Approx. 0.43

Ordering information

Other models ➔ www.mysick.com/en/IMF18

- **Connection:** male connector, M12, 4-pin

Installation type	Sensing range S_n	Electrical wiring	Output type	Output function	IO-Link	Connection diagram	Type	Part no.
Flush	≤ 8 mm	DC 3-wire	NPN	NO	–	Cd-007	IMF18-08BNSNC0S	1076664
			PNP	NC	–	Cd-008	IMF18-08BPONC0S	1076663
				NO	✔	Cd-007	IMF18-08BPSNC0S	1076662
		DC 4-wire	PNP	Complementary	✔	Cd-006	IMF18-08BPPNC0S	1076665
Non-flush	≤ 12 mm	DC 3-wire	NPN	NO	–	Cd-007	IMF18-12NNSNC0S	1076668
			PNP	NC	–	Cd-008	IMF18-12NPONC0S	1076667
				NO	✔	Cd-007	IMF18-12NPSNC0S	1076666
		DC 4-wire	PNP	Complementary	✔	Cd-006	IMF18-12NPPNC0S	1076669

Dimensional drawings (Dimensions in mm (inch))

IMF18, flush

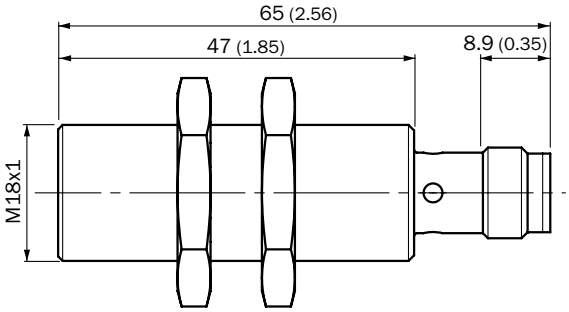

IMF18, non flush

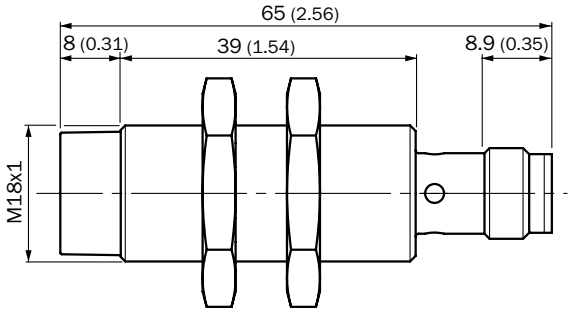

Connection diagram

Cd-006

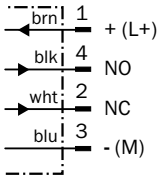

Cd-007

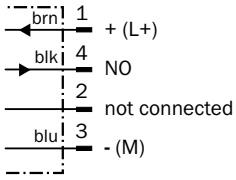

Cd-008

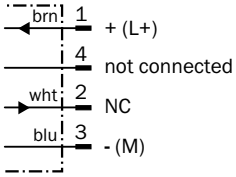

Installation note

Flush installation

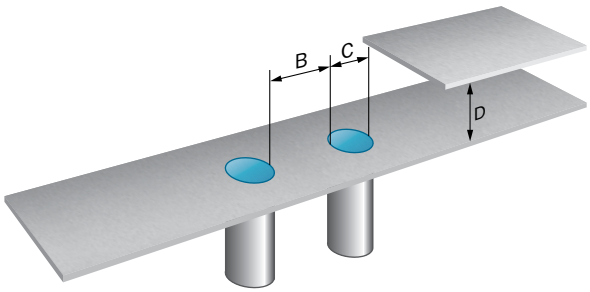

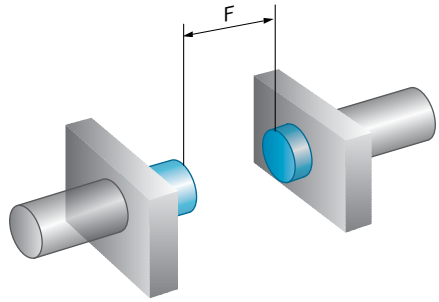

Non-flush installation

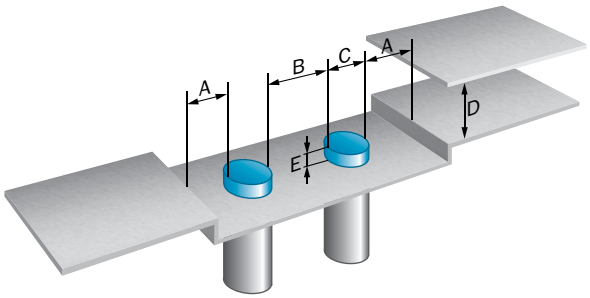

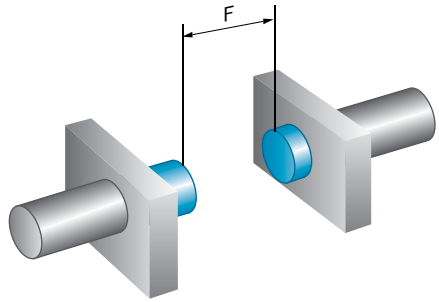

	Installation type	Sensing range Sn	A	B	C	D	E	F
IMF18-08Bxxxxxx	Flush	8 mm	9 mm	18 mm	18 mm	24 mm	2 mm	64 mm
IMF18-12Nxxxxxx	Non-flush	12 mm	18 mm	34 mm	18 mm	34 mm	12 mm	96 mm

Installation aid

Normally open

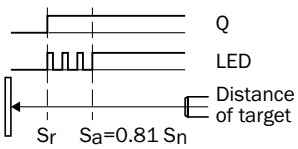

Normally closed

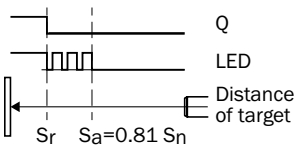

Response curve

Flush installation

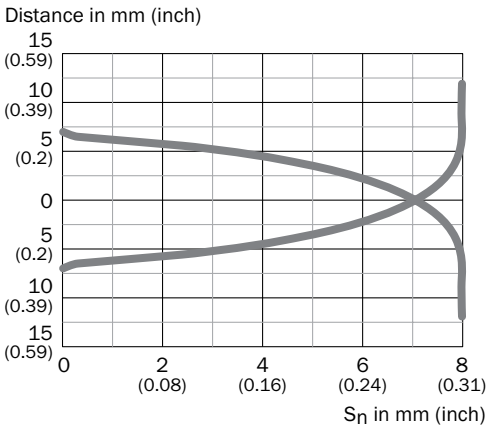

Non-flush installation

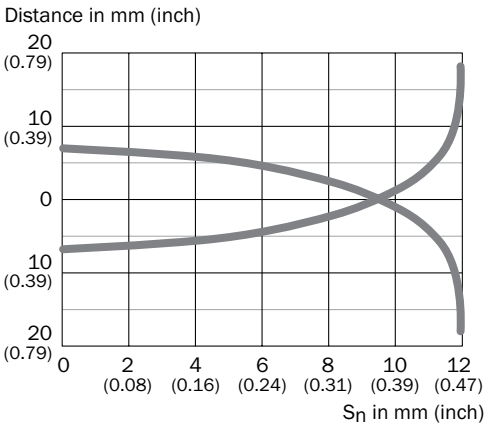

THE ECONOMIC STANDARD FOR USE IN THE FOOD INDUSTRY

Product description

The IMF inductive proximity sensor is the new standard for reliability in the food industry. With its extended sensing ranges, made highly precise thanks to the use of SICK ASIC technology, the IMF ensures reliable, stable processes. What's more, its wide-ranging specification limits allow the IMF to be used in all areas of food production: a huge benefit when it comes to product selection and warehousing. The visual adjustment indicator saves time during commissioning and helps cut down on errors. Communication via IO-Link is also possible, creating more flexibility and adding more functions for automation applications. With an extensive standard product portfolio available, even special devices can be put into action quickly and easily.

At a glance

- Types M30
- Extended sensing ranges: 15 mm ... 20 mm
- Electrical configuration: DC 3- and 4-wire
- Enclosure rating: IP 68, IP 69K
- Temperature range: −40 °C ... 100 °C
- FDA-approved stainless steel housing (V4A) and active sensing face made of plastic (LCP)
- Visual adjustment indicator, IO-Link-ready
- Resistant to industrial cleaning agents, Ecolab-certified

Your benefits

- Stable processes thanks to extended, highly precise sensing ranges enabled through the use of SICK ASIC technology
- Reduced machine downtimes thanks to a longer service life, even when subjected to frequent cleaning cycles
- Quick and easy installation thanks to the visual adjustment indicator
- High degree of flexibility and communication options thanks to IO-Link
- Easy to implement customer-specific variants thanks to a modular concept

Additional information

Detailed technical data 19
Ordering information 20
Dimensional drawings 20
Connection diagram. 20
Installation note 21
Installation aid 21
Response curve 21

➜ www.mysick.com/en/IMF30

For more information, simply enter the link or scan the QR code and get direct access to technical data, CAD design models, operating instructions, software, application examples, and much more.

8019110/2016-01-15
Subject to change without notice

Detailed technical data

Features

	Flush	Non-flush
Housing	Cylindrical	
Thread size	M30 x 1.5	
Sensing range S_n	15 mm	20 mm
Safe sensing range S_a	12.15 mm	16.2 mm
Installation type	Flush	Non-flush
Switching frequency	500 Hz	
Output type	PNP / NPN (depending on type)	
Output function	NO / NC / Complementary (depending on type)	NC / NO / Complementary (depending on type)
Electrical wiring	DC 3-wire / DC 4-wire (depending on type)	
Enclosure rating	IP 68 [1] IP 69K [2]	
Special features	Suitable for use in the food industry, Resistant to cleaning agents Capable of communication via IO-Link 1.0	

[1] According to EN 60529.
[2] According to ISO 20653:2013-03.

Mechanics/electronics

Supply voltage	10 V DC ... 30 V DC
Ripple	≤ 10 %
Voltage drop	≤ 2 V
Current consumption [2]	≤ 10 mA
Hysteresis	3 % ... 20 %
Repeatability [3] [4]	≤ 2 %
Temperature drift (of S_r)	± 10 %
EMC	According to EN 60947-5-2
Continuous current I_a	≤ 200 mA
Connection type [5]	Male connector, M12
Short-circuit protection	✔
Reverse polarity protection	✔
Power-up pulse protection	✔
Power-up pulse	≤ 5 ms
Shock and vibration resistance	100 g / 2 ms / 500 cycles; 150 g / 1 Mio cycles; 10 Hz ... 55 Hz / 1 mm; 55 Hz ... 500 Hz / 60 g
Ambient operating temperature	–40 °C ... +100 °C
Housing material	V4A (1.4404, AISI 316L)
Sensing face material	Plastic, LCP (FDA certified)
Tightening torque, max. [6]	Typ. 100 Nm
Protection class [7]	II

[1] At I_a max.
[2] Without load.
[3] Ub and Ta constant.
[4] Of Sr.
[5] With gold plated contact pins.
[6] Valid if toothed side of nut is used.
[7] Reference voltage DC 50 V.

Reduction factors

	Flush	Non-flush
Note	The values are reference values which may vary	
Stainless steel (V2A, 304)	Approx. 0.62	Approx. 0.78
Aluminum (Al)	Approx. 0.26	Approx. 0.44
Copper (Cu)	Approx. 0.17	Approx. 0.36
Brass (Br)	Approx. 0.27	Approx. 0.46

Ordering information

Other models ➜ www.mysick.com/en/IMF30

- **Connection:** male connector, M12, 4-pin

Installation type	Sensing range S_n	Electrical wiring	Output type	Output function	IO-Link	Connection diagram	Type	Part no.
Flush	≤ 15 mm	DC 3-wire	NPN	NO	–	Cd-007	IMF30-15BNSNC0S	1076657
			PNP	NC	–	Cd-008	IMF30-15BPONC0S	1076654
				NO	✔	Cd-007	IMF30-15BPSNC0S	1076653
		DC 4-wire	PNP	Complementary	✔	Cd-006	IMF30-15BPPNC0S	1076656
Non-flush	≤ 20 mm	DC 3-wire	NPN	NO	–	Cd-007	IMF30-20NNSNC0S	1076661
			PNP	NC	–	Cd-008	IMF30-20NPONC0S	1076659
				NO	✔	Cd-007	IMF30-20NPSNC0S	1076658
		DC 4-wire	PNP	Complementary	✔	Cd-006	IMF30-20NPPNC0S	1076660

Dimensional drawings (Dimensions in mm (inch))

IMF30, flush

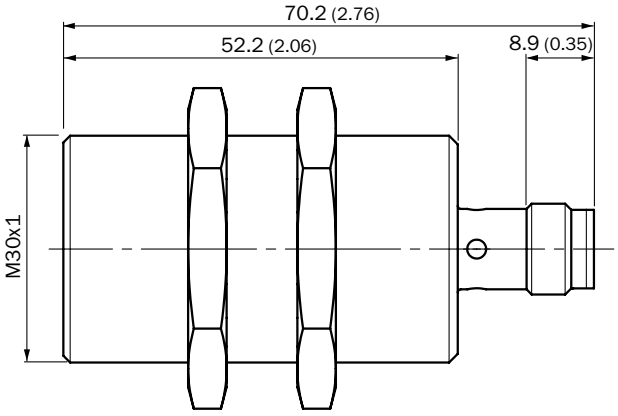

IMF30, non flush

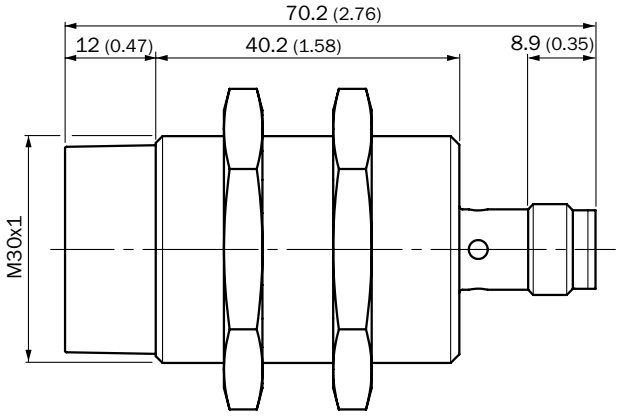

Connection diagram

Cd-006

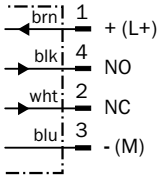

Cd-007

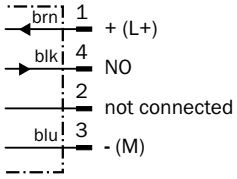

Cd-008

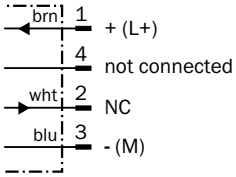

Installation note

Flush installation

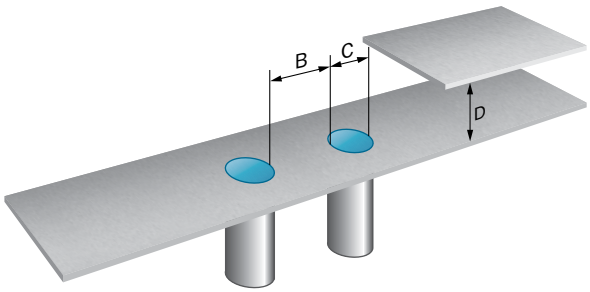

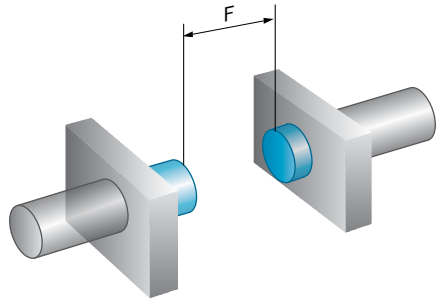

Non-flush installation

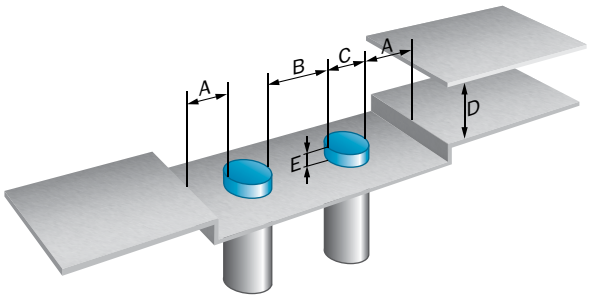

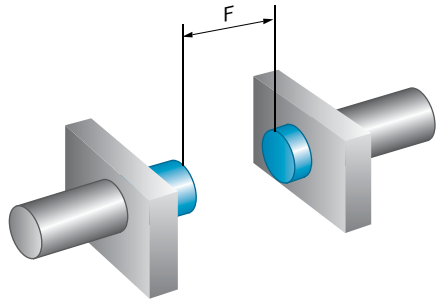

	Installation type	Sensing range Sn	A	B	C	D	E	F
IMF30-15Bxxxxxx	Flush	15 mm	-	40 mm	30 mm	45 mm	-	120 mm
IMF30-20Nxxxxxx	Non-flush	20 mm	20 mm	62 mm	30 mm	60 mm	20 mm	160 mm

Installation aid

Normally open

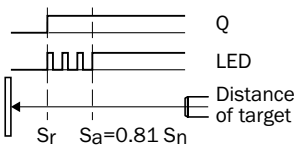

Normally closed

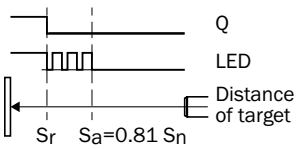

Response curve

Flush installation

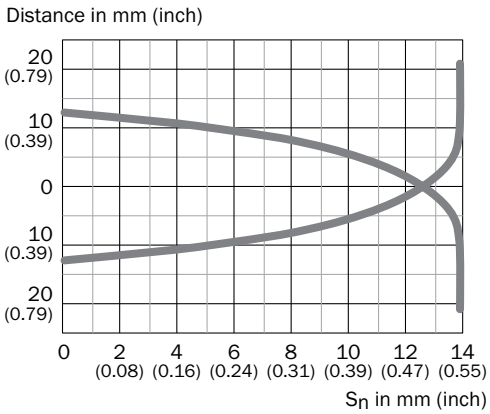

Non-flush installation

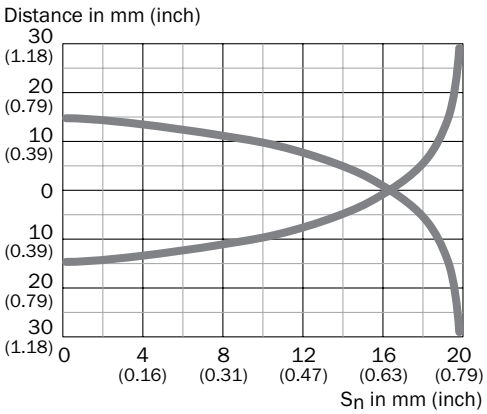

Accessories

Mounting systems

Universal bar clamp systems

Figure	Description	Type	Part no.	IMF08	IMF12	IMF18	IMF30
	Universal bar clamp for mounting bars with 12 mm diameter	BEF-KHS-KH3	5322626	●	●	●	●
	Universal clamp bracket for mounting bars with 12 mm diameter	BEF-KHS-KH3N	5322627	●	●	●	●
	Plate N05 for universal clamp bracket, M12	BEF-KHS-N05	2051611	–	●	–	–
	Plate N05N for universal clamp bracket, M12	BEF-KHS-N05N	2051621	–	●	–	–
	Plate N06 for universal clamp bracket, M18	BEF-KHS-N06	2051612	–	–	●	–
	Plate N06N for universal clamp bracket, M18	BEF-KHS-N06N	2051622	–	–	●	–
	Plate N10 for universal clamp bracket, M30	BEF-KHS-N10	2062372	–	–	–	●
	Plate N11N for universal clamp bracket	BEF-KHS-N11N	2071081	●	●	●	●
	Mounting bar, straight, 200 mm, steel	BEF-MS12G-A	4056054	●	●	●	●
	Mounting bar, straight, 300 mm, steel	BEF-MS12G-B	4056055	●	●	●	●
	Mounting bar, straight, 200 mm, stainless steel	BEF-MS12G-NA	4058914	●	●	●	●
	Mounting bar, straight, 300 mm, stainless steel	BEF-MS12G-NB	4058915	●	●	●	●
	Mounting bar, L-shaped, 150 mm x 150 mm, steel	BEF-MS12L-A	4056052	●	●	●	●
	Mounting bar, L-shaped, 250 x 250 mm, steel	BEF-MS12L-B	4056053	●	●	●	●
	Mounting bar, Z-shaped, 150 mm x 70 mm x 150 mm, stainless steel	BEF-MS12Z-NA	4058916	●	●	●	●
	Mounting bar, Z-shaped, 150 mm x 70 mm x 250 mm, stainless steel	BEF-MS12Z-NB	4058917	●	●	●	●

Mounting brackets and mounting plates

Mounting brackets

Figure	Description	Type	Part no.	IMF08	IMF12	IMF18	IMF30
	Mounting plate for M8 sensors	BEF-WG-M08	5321722	●	–	–	–
	Mounting plate for M12 sensors	BEF-WG-M12	5321869	–	●	–	–
	Mounting plate for M18 sensors	BEF-WG-M18	5321870	–	–	●	–
	Mounting plate for M30 sensors	BEF-WG-M30	5321871	–	–	–	●

Figure	Description	Type	Part no.	IMF08	IMF12	IMF18	IMF30
	Mounting bracket, M8 thread	BEF-WN-M08	5321721	●	–	–	–
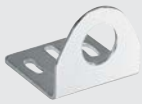	Mounting bracket, M12 thread	BEF-WN-M12	5308447	–	●	–	–
	Mounting bracket, M18 thread	BEF-WN-M18	5308446	–	–	●	–
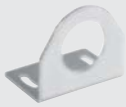	Mounting bracket, M30 thread	BEF-WN-M30	5308445	–	–	–	●

Mounting plates

Figure	Description	Type	Part no.	IMF08	IMF12	IMF18	IMF30
	Mounting plate for M12 housing	BEF-WG-M12N	5320950	–	●	–	–
	Mounting plate for M18 housing	BEF-WG-M18N	5320948	–	–	●	–
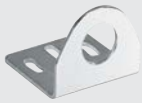	Mounting bracket for M12 housing	BEF-WN-M12N	5320949	–	●	–	–
	Mounting bracket for M18 housing	BEF-WN-M18N	5320947	–	–	●	–

Terminal and alignment brackets

Alignment brackets

Figure	Description	Type	Part no.	IMF08	IMF12	IMF18	IMF30
	Mounting bracket with ball-and-socket	BEF-WN-M18-ST02	5312973	–	–	●	–

Connection systems

Plug connectors and cables

Connecting cables with female connector M12, 4-pin, PP, hygienic systems

Figure	Connection type head A	Connection type head B	Connecting cable	Type	Part no.
	Female connector, M12, 4-pin, straight, unshielded	Cable, open conductor heads	2 m, 4-wire	DOL-1204-G02MRN	6058291
			5 m, 4-wire	DOL-1204-G05MRN	6058476
			10 m, 4-wire	DOL-1204-G10MRN	6058478
	Female connector, M12, 4-pin, angled, with 3 LEDs, unshielded	Cable, open conductor heads	2 m, 4-wire	DOL-1204-L02MRN	6058482
			5 m, 4-wire	DOL-1204-L05MRN	6058483
			10 m, 4-wire	DOL-1204-L10MRN	6058484
	Female connector, M12, 4-pin, angled, unshielded	Cable, open conductor heads	2 m, 4-wire	DOL-1204-W02MRN	6058474
			5 m, 4-wire	DOL-1204-W05MRN	6058477
			10 m, 4-wire	DOL-1204-W10MRN	6058479

Connecting cables with female connector M12, 4-pin, PUR, halogen-free, Oil / grease resistant

Figure	Connection type head A	Connection type head B	Connecting cable	Type	Part no.
	Female connector, M12, 4-pin, straight, unshielded	Cable, open conductor heads	2 m, 4-wire	DOL-1204-G02MC	6025900
			5 m, 4-wire	DOL-1204-G05MC	6025901
			10 m, 4-wire	DOL-1204-G10MC	6025902
	Female connector, M12, 4-pin, angled, with 3 LEDs, unshielded	Cable, open conductor heads	2 m, 4-wire	DOL-1204-L02MC	6039086
			5 m, 4-wire	DOL-1204-L05MC	6020398
			10 m, 4-wire	DOL-1204-L10MC	6039088
	Female connector, M12, 4-pin, angled, unshielded	Cable, open conductor heads	2 m, 4-wire	DOL-1204-W02MC	6025903
			5 m, 4-wire	DOL-1204-W05MC	6025904
			10 m, 4-wire	DOL-1204-W10MC	6025905

Connecting cables with male connector M12, 4-pin, PUR, halogen-free, Oil / grease resistant

Figure	Connection type head A	Connection type head B	Connecting cable	Type	Part no.
	Male connector, M12, 4-pin, straight, unshielded	Cable, open conductor heads	2 m, 4-wire	STL-1204-G02MC	6028077
			5 m, 4-wire	STL-1204-G05MC	6048170
			10 m, 4-wire	STL-1204-G10MC	6041750
	Male connector, M12, 4-pin, angled, unshielded	Cable, open conductor heads	5 m, 4-wire	STL-1204-W05MC	6037472
			15 m, 4-wire	STL-1204-W15MC	6037473

Connection cables with female connector and male connector M12, 4-pin, PP, hygienic systems

Figure	Connection type head A	Connection type head B	Connecting cable	Type	Part no.
	Female connector, M12, 4-pin, angled, unshielded	Male connector, M12, 4-pin, straight	2 m, 4-wire	DSL-1204-B02MRN	6058502
			5 m, 4-wire	DSL-1204-B05MRN	6058503
	Female connector, M12, 4-pin, straight, unshielded	Male connector, M12, 4-pin, straight	2 m, 4-wire	DSL-1204-G02MRN	6058499
			5 m, 4-wire	DSL-1204-G05MRN	6058500

Connection cables with female connector and male connector M12, 4-pin, PUR, halogen-free, Oil / grease resistant

Figure	Connection type head A	Connection type head B	Connecting cable	Type	Part no.
	Female connector, M12, 4-pin, straight, unshielded	Male connector, M12, 4-pin, straight	5 m, 4-wire	DSL-1204-G05MC	6033245
			10 m, 4-wire	DSL-1204-G10MC	6033698

Dimensional drawings Connection systems

DOL-1204-GxxMRN

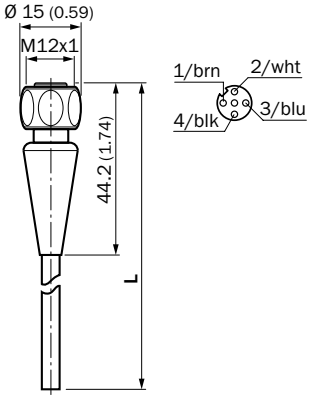

DOL-1204-LxxMRN, DOL-1204-WxxMRN

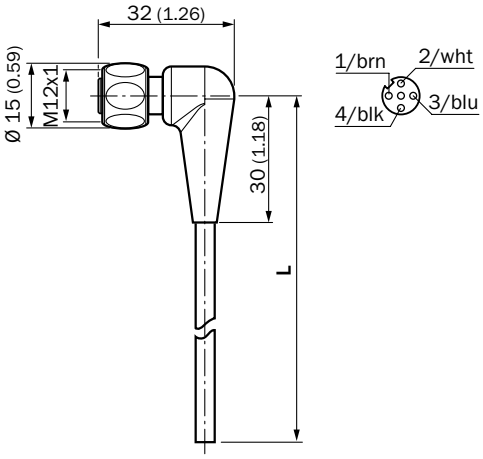

DOL-1204-GxxMC

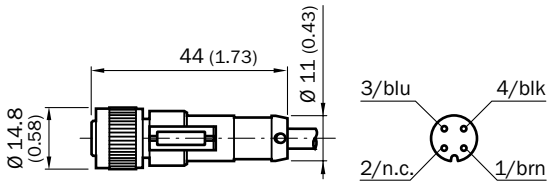

DOL-1204-L0xxMC

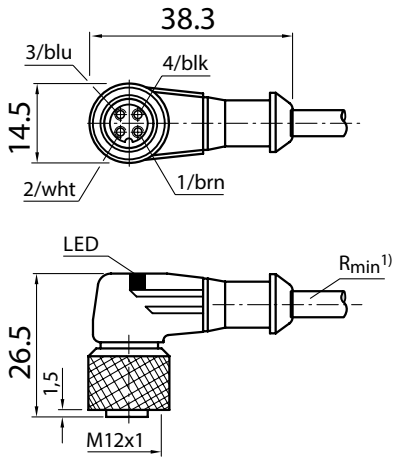

DOL-1204-WxxMC

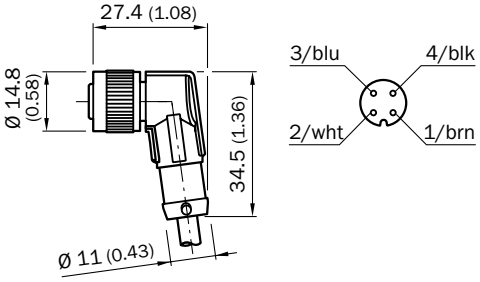

DSL-1204-B02MRN / DSL-1204-B05MRN

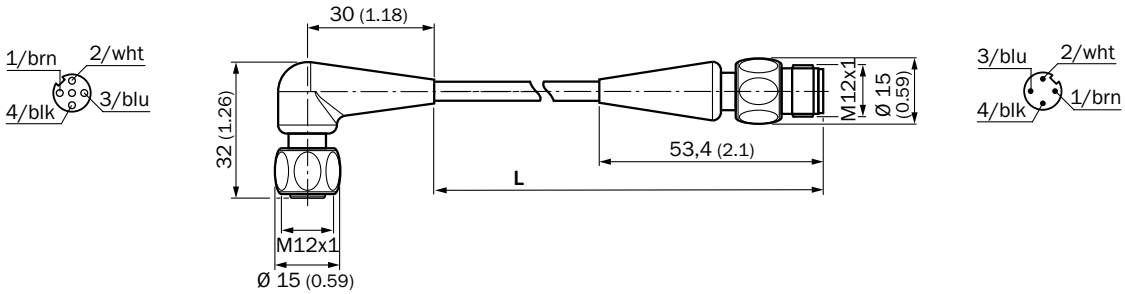

DSL-1204-G02MRN / DSL-1204-G05MRN

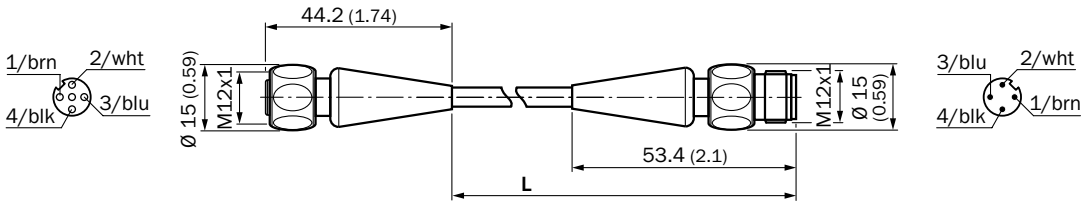

DSL-1204-G05MC / DSL-1204-G10MC

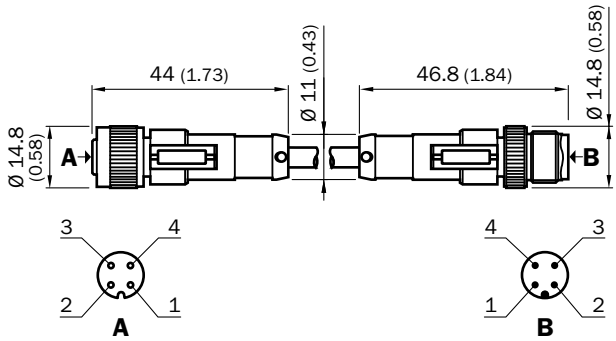

STL-1204-G02MC

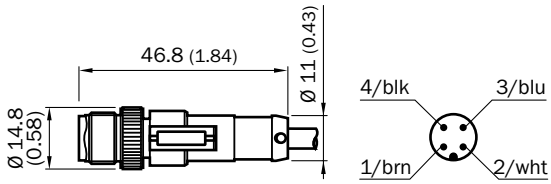

STL-1204-W05MC / STL-1204-W15MC

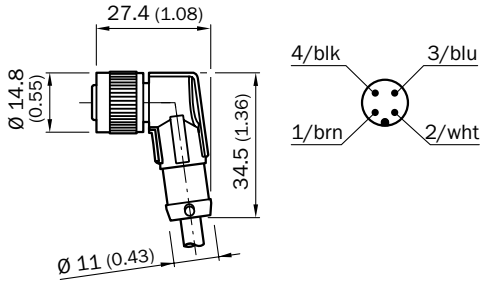

Dimensional drawings Mounting systems

BEF-KHS-KH3

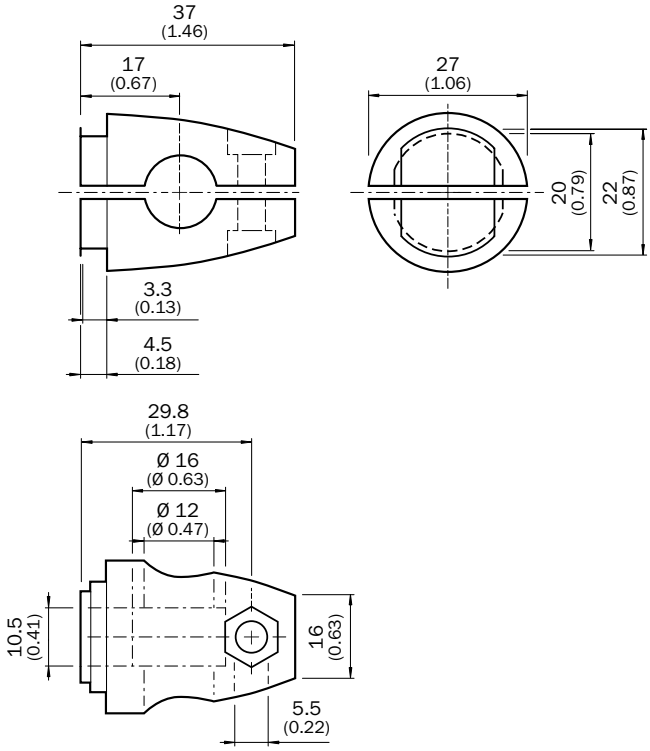

BEF-KHS-KH3N

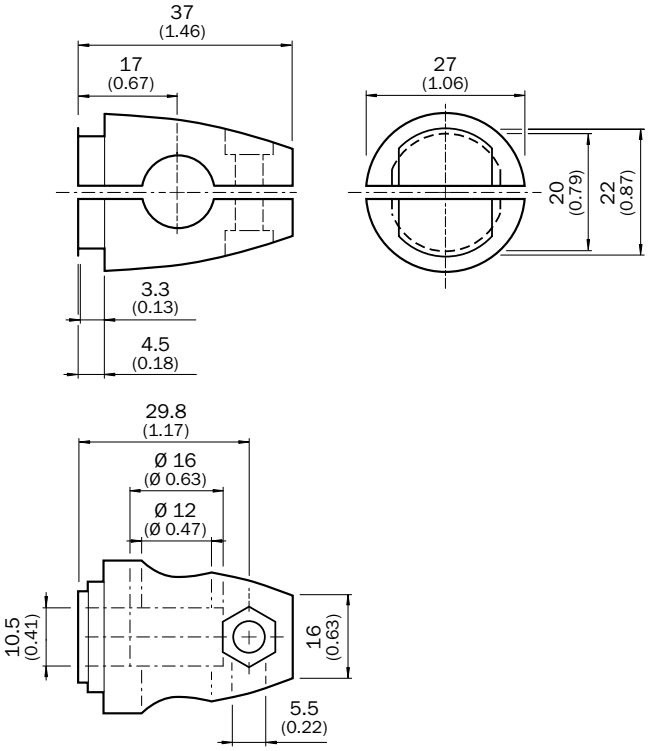

BEF-KHS-N05 / BEF-KHS-N05N

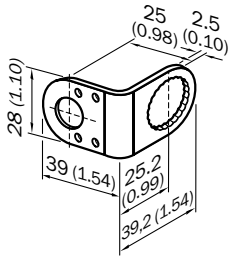

BEF-KHS-N06 / BEF-KHS-N06N

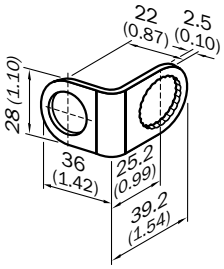

BEF-KHS-N10

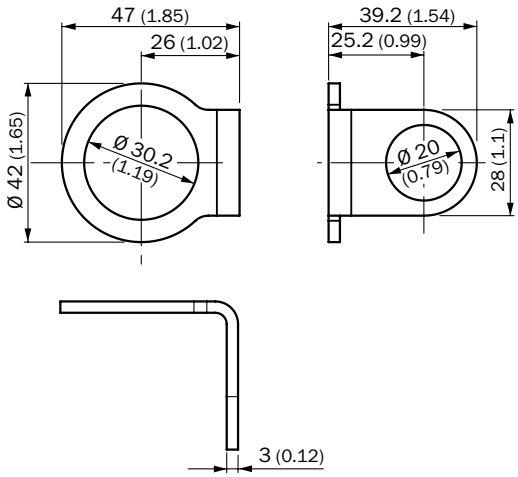

BEF-KHS-N11N

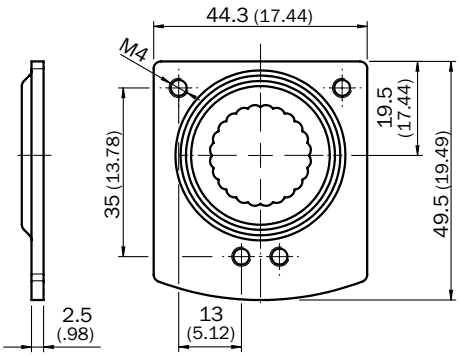

BEF-MS12G-A / BEF-MS12G-B
BEF-MS12G-NA / BEF-MS12G-NB

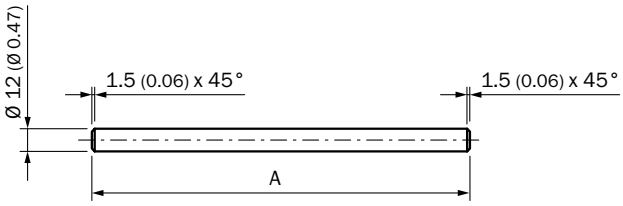

① BEF-MS12G-(N)A: A = 200 mm
② BEF-MS12G-(N)B: A = 300 mm

BEF-MS12L-A / BEF-MS12L-B

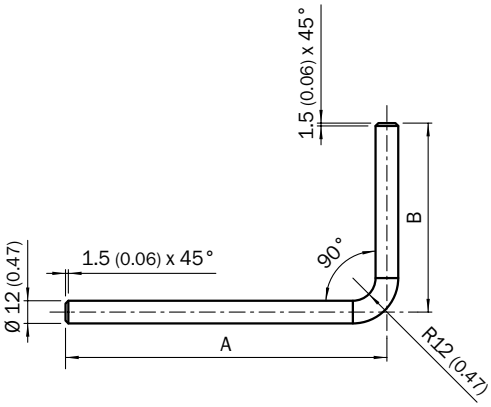

① BEF-MS12L-(N)A: A = 200 mm, B = 150 mm
② BEF-MS12L-(N)B: A = 250 mm, B = 250 mm

BEF-MS12Z-NA / BEF-MS12Z-NB

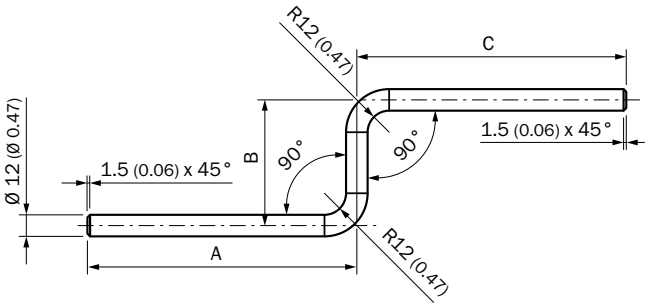

① BEF-MS12Z-(N)A: A = 150 mm, B = 70 mm, C = 150 mm
② BEF-MS12Z-(N)B: A = 150 mm, B = 70 mm, C = 250 mm

BEF-WG-M08

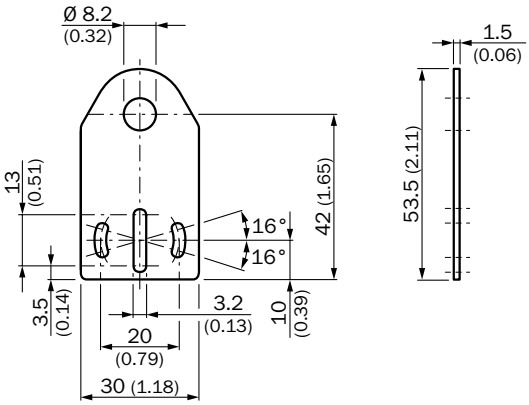

BEF-WG-M12 / BEF-WG-M12N

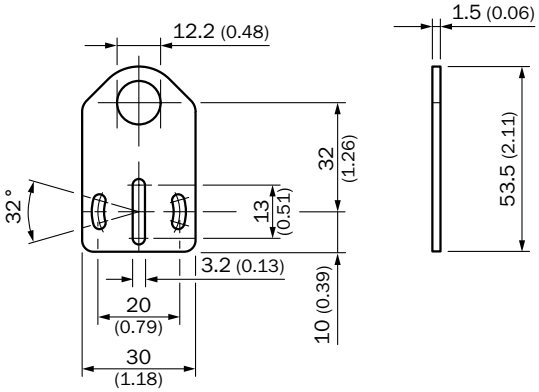

BEF-WG-M18 / BEF-WG-M18N

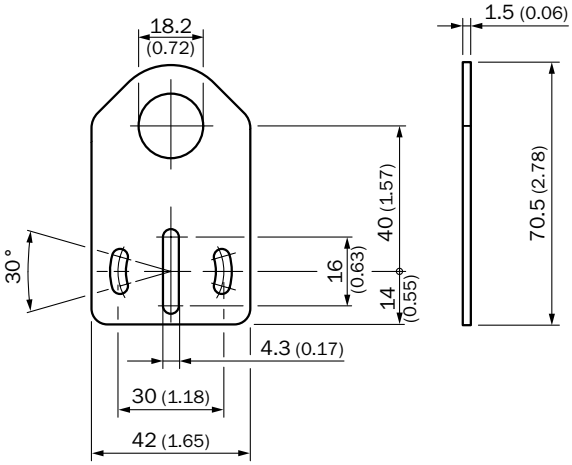

BEF-WG-M30

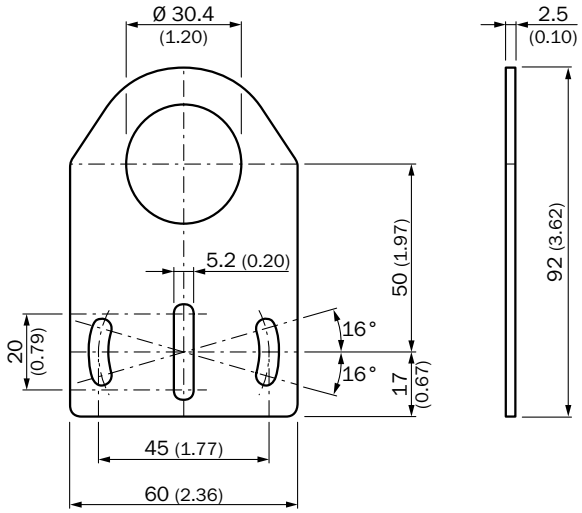

BEF-WN-M08

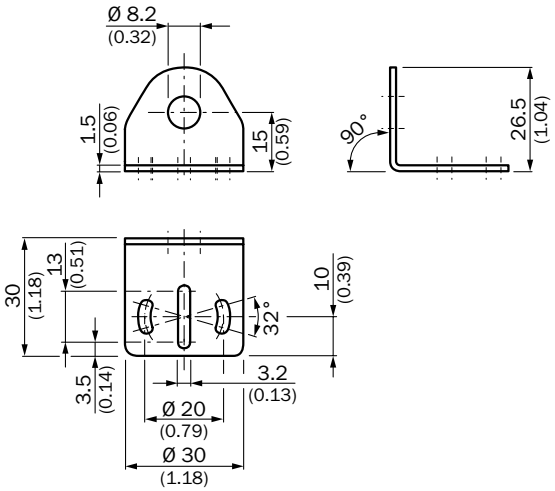

BEF-WN-M12 / BEF-WN-M12N

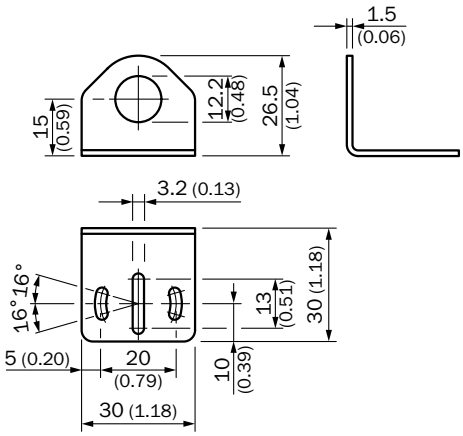

BEF-WN-M18 / BEF-WN-M18N

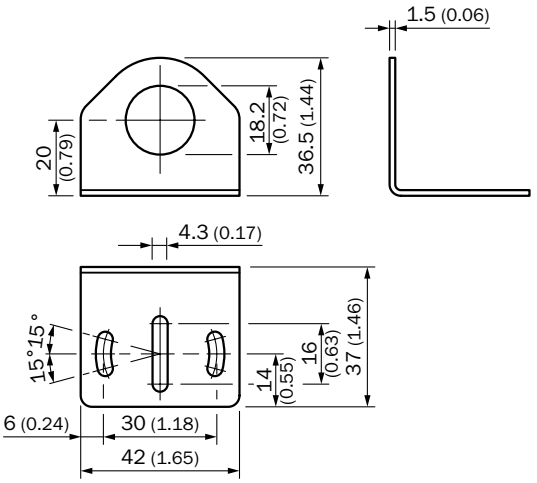

BEF-WN-M18-ST02

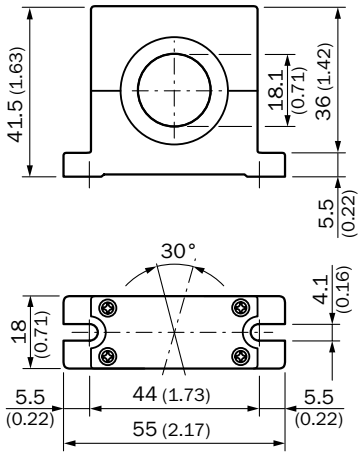

BEF-WN-M30

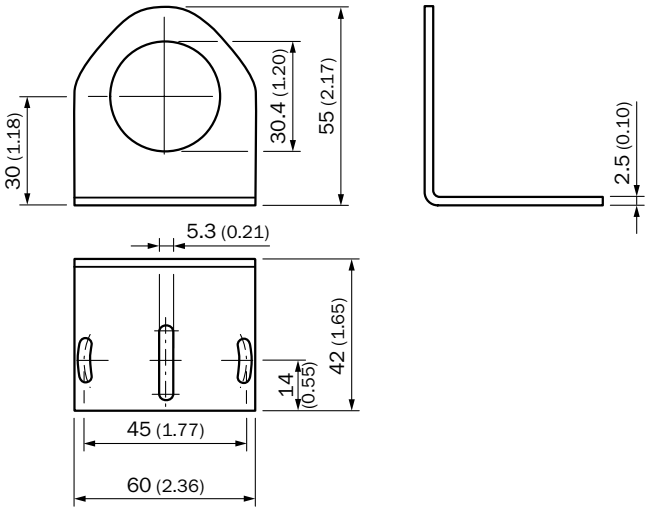

REGISTER AT WWW.SICK.COM TODAY AND ENJOY ALL THE BENEFITS

- Select products, accessories, documentation and software quickly and easily.
- Create, save and share personalized wish lists.
- View the net price and date of delivery for every product.
- Requests for quotation, ordering and delivery tracking made easy.
- Overview of all quotations and orders.
- Direct ordering: submit even very complex orders in moments.
- View the status of quotations and orders at any time. Receive e-mail notifications of status changes.
- Easily repeat previous orders.
- Conveniently export quotations and orders to work with your systems.

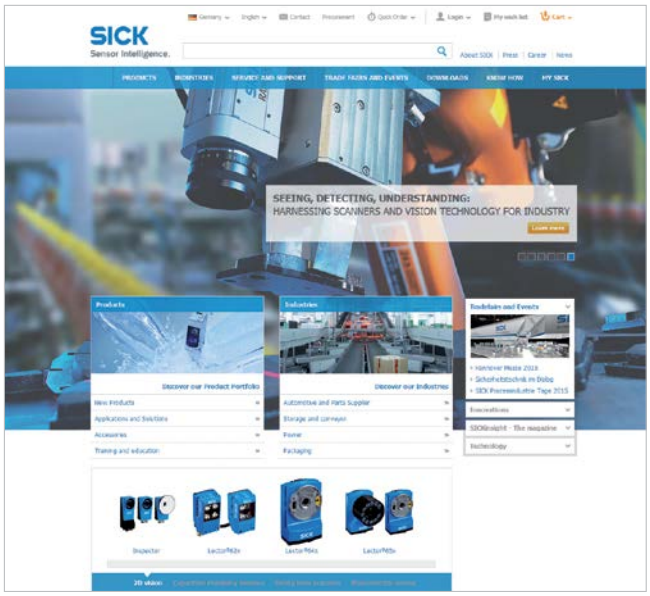

SERVICES FOR MACHINES AND SYSTEMS: SICK LifeTime Services

Our comprehensive and versatile LifeTime Services are the perfect addition to the comprehensive range of products from SICK. The services range from product-independent consulting to traditional product services.

Consulting and design
Safe and professional

Product and system support
Reliable, fast and on-site

Verification and optimization
Safe and regularly inspected

Upgrade and retrofits
Easy, safe and economical

Training and education
Practical, focused and professional

8019110/2016-01-15 · 1M · Pre USmod en44

SICK AT A GLANCE

SICK is a leading manufacturer of intelligent sensors and sensor solutions for industrial applications. With almost 7,000 employees and over 50 subsidiaries and equity investments as well as numerous representative offices worldwide, we are always close to our customers. A unique range of products and services creates the perfect basis for controlling processes securely and efficiently, protecting individuals from accidents and preventing damage to the environment.

We have extensive experience in various industries and understand their processes and requirements. With intelligent sensors, we can deliver exactly what our customers need. In application centers in Europe, Asia and North America, system solutions are tested and optimized in accordance with customer specifications. All this makes us a reliable supplier and development partner.

Comprehensive services round out our offering: SICK LifeTime Services provide support throughout the machine life cycle and ensure safety and productivity.

For us, that is "Sensor Intelligence."

Worldwide presence:

Australia, Austria, Belgium, Brazil, Canada, Chile, China, Czech Republic, Denmark, Finland, France, Germany, Great Britain, Hungary, India, Israel, Italy, Japan, Malaysia, Mexico, Netherlands, New Zealand, Norway, Poland, Romania, Russia, Singapore, Slovakia, Slovenia, South Africa, South Korea, Spain, Sweden, Switzerland, Taiwan, Thailand, Turkey, United Arab Emirates, USA, Vietnam.

Detailed addresses and additional representatives → www.sick.com

SICK
Sensor Intelligence.