Jul.1.2024 Copyright 2024 HIROSE ELECTRIC CO., LTD. All Rights Reserved.
In case of consideration for using Automotive equipment / device which demand high reliability, kindly contact our sales window correspondents.

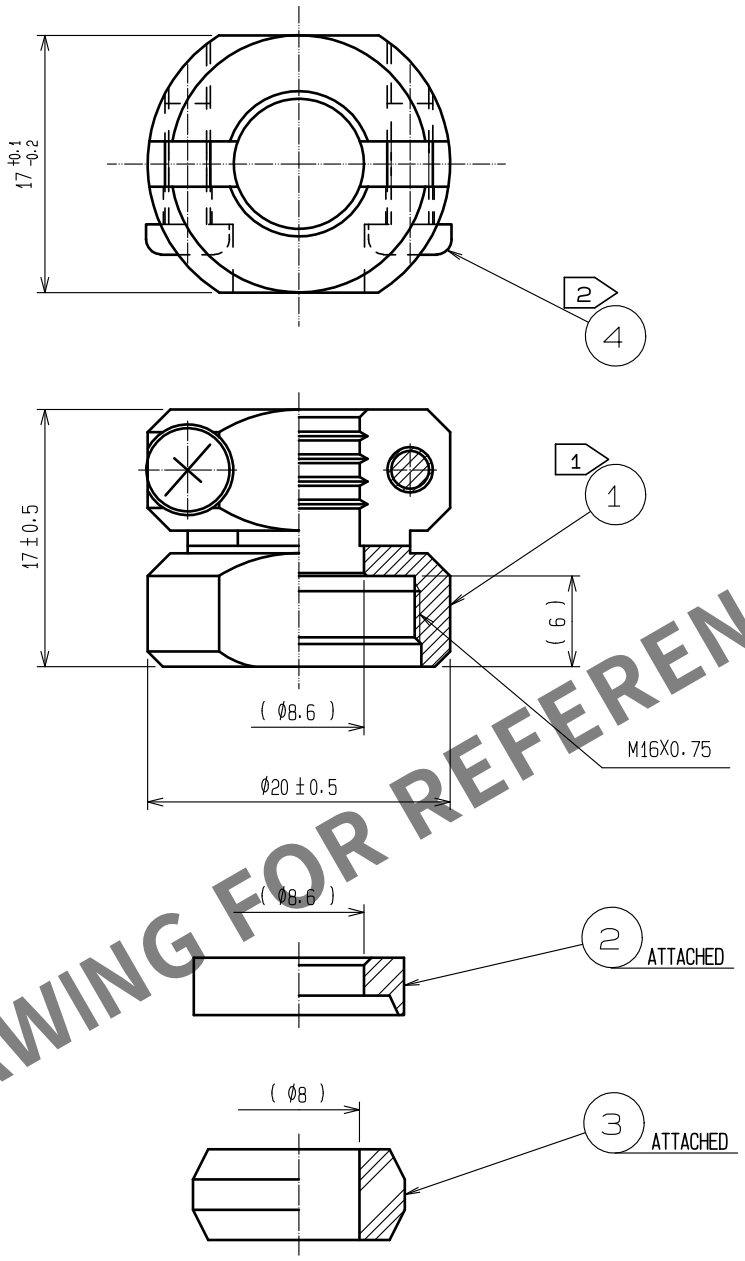

HRS DRAWING FOR REFERENCE

1 THE RECOMMENDED CLAMP TRQUE OF REF. ① TO BE 2 TO 2.5N·m
LOCTITE 263, HENKEL JAPAN OR EQUIVALENT IS RECOMMENDND TO PREVENT
REF. NO. ① FROM LOOSENING.

2 THE RECOMMENDED CLAMP TRQUE OF REF. ④ TO BE 0.65 TO 0.7N·m

NO.	MATERIAL	FINISH . REMARKS	NO.	MATERIAL	FINISH . REMARKS
2	PPS	(BLACK) UL94V-0	4	STAINLESS STEEL	M3X0.5X8
1	BRASS	BLACK CHROME PLATING	3	NBR	(GRAY)

UNITS mm	SCALE 2 : 1	COUNT	DESCRIPTION OF REVISIONS	DESIGNED	CHECKED	DATE
		0				

HIROSE ELECTRIC CO., LTD.

APPROVED	: HY. KOBAYASHI	18.03.12	DRAWING NO.	EDC-110598-31-00
CHECKED	: HY. KOBAYASHI	18.03.12	PART NO.	JR13WCC-8(31)
DESIGNED	: TH. KAMEYA	18.03.09	CODE NO.	CL114-2049-1-31
DRAWN	: TH. KAMEYA	18.03.09		0 1/1

FORM HC0011-5-51