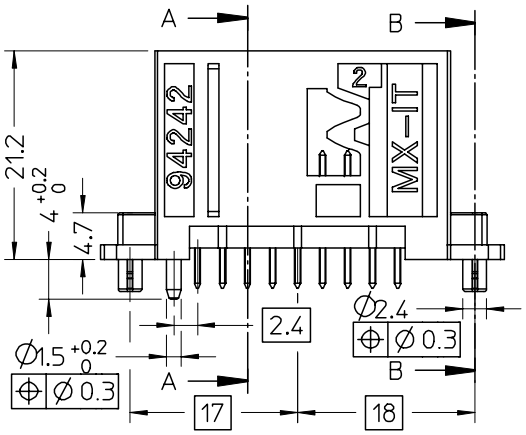

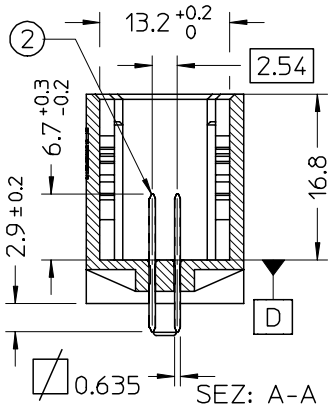

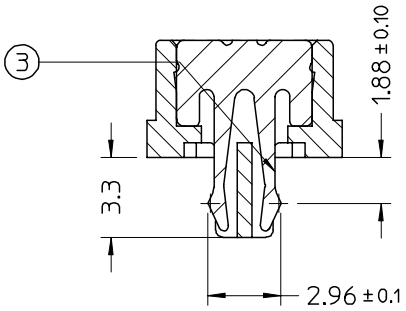

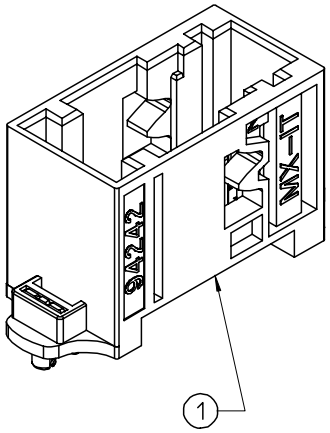

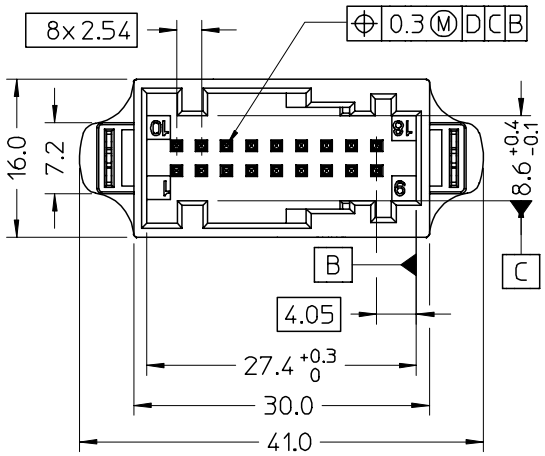

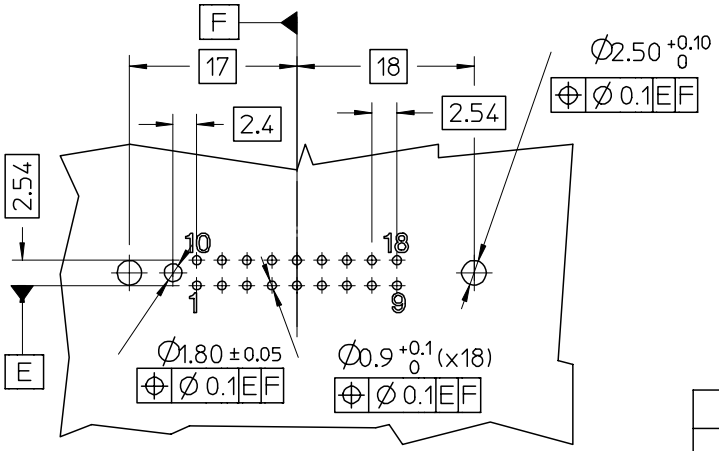

SCHEMA C.S. SPESS. 1.6 +/-0.15
LATO MONTAGGIO COMPONENTI

P.C.B. LAYOUT THICKNESS 1.6 +/-0.15
HEADER MOUNTING SIDE

1 HOUSING
PCT GF 30% COLORE BIANCO (WHITE COLOUR)
2 CONTATTI (CONTACTS)
OTTONE STAGNATO (BRASS PLATED)
3 AGGANCI (BOARD LOCK)
MATERIALE METALLICO (METALLIC MATERIAL)

P/N	PACKAGING	S.P.Q.
94242-2118	VEDERE PK-94242-002 *SEE PK-94242-002*	19008
94242-2318	VEDERE PK-94242-001 *SEE PK-94242-001*	15120

NOTE:
FORZA DI RITENZIONE BOARD LOCK SU
CIRCUITO STAMPATO: 15 N MIN.
(RETENTION FORCE OF BOARD LOCK
SYSTEM ON PRINTED CIRCUIT: 15 N MIN.)

PER TUTTI GLI ALTRI PUNTI VEDERE PS-94242-001
FOR ALL OTHER ITEMS, REFER TO PS-94242-001

Std.Descr.:"HEADER WHITE W/PEGS 18 CKT"

EC NO: Z2006-0062
DRWN: FGOTTARD 2005/10/25
CHKD: RSANDANO 2005/10/25
APPR: GZUIN 2005/10/26
DESCRIPTION
REV: A

QUALITY SYMBOLS
▼ - 0
Ⓒ - 0

GENERAL TOLERANCES (UNLESS SPECIFIED)

	mm	INCH
4 PLACES	± ---	± ---
3 PLACES	± ---	± ---
2 PLACES	± 0.3	± ---
1 PLACE	± 0.3	± ---
ANGULAR ± 2 °		

DRAFT WHERE APPLICABLE
MUST REMAIN
WITHIN DIMENSIONS

SCALE 2:1
DESIGN UNITS METRIC
FIRST ANGLE PROJECTION
REVISE ON CAD ONLY
DIMENSION STYLE MM ONLY
DRAWN BY FGOTTARD DATE 2003/02/18
CHECKED BY MTESTAGU DATE 2003/02/18
APPROVED BY GZUIN DATE 2003/02/18

TITLE
18 CKT WHITE HEADER
WITH BOARD LOCK

molex MOLEX INCORPORATED

MATERIAL NO. SEE TABLE
DOCUMENT NO. SD-94242-003
SHEET NO. 1 OF 1

THIS DRAWING CONTAINS INFORMATION THAT IS PROPRIETARY TO MOLEX INCORPORATED AND SHOULD NOT BE USED WITHOUT WRITTEN PERMISSION

A3