	REVISIONS				
REV.	ECN NO.	LOCATION	DESCRIPTION	DATE	DESIGN
A0	N/A		INITIAL RELEASE	/	/
A1	N/A		图面升级整理图面	2025.1.16	阿树

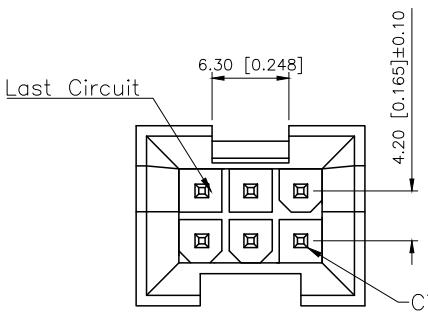

2X03P

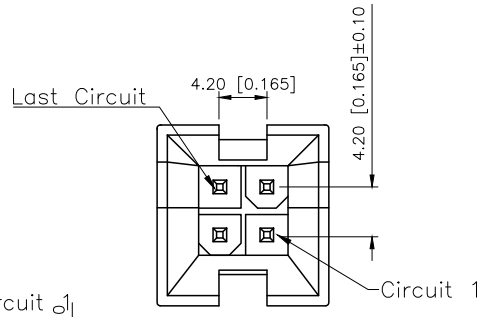

2X02P

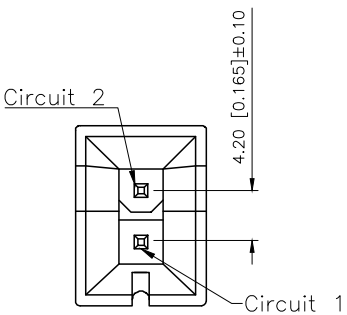

2X01P

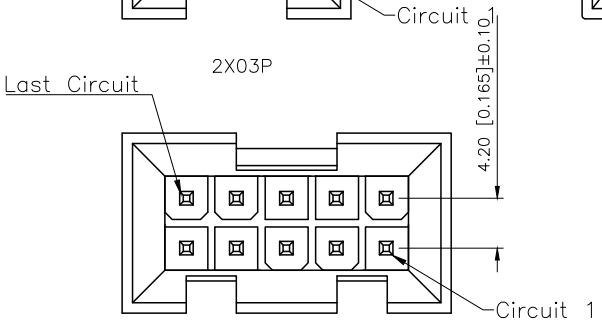

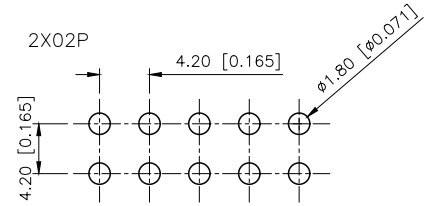

PCB LAYOUT: Component Side
Recommended PCB Thickness 1.78MAX

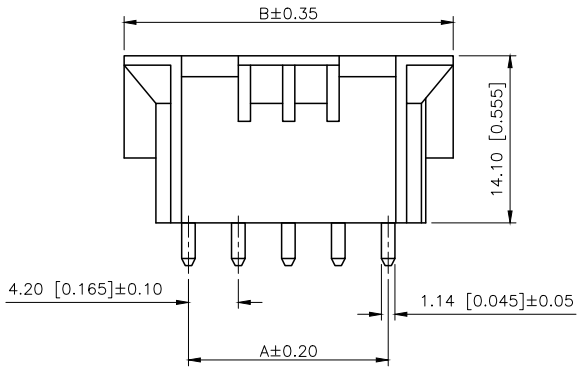

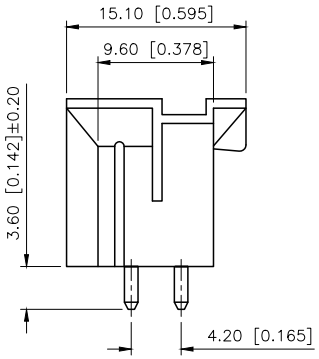

PART NO.:

X9357 W V-2xXX X-XX SN XX
① ② ③ ④ ⑤ ⑥ ⑦ ⑧

①Series No
②Category:W-Wafer
③Welding Board Angle:V-Stright 180°
④Row No.-Pin No: 2xXX-Double row
⑤Special NO:B-Arrange ushering with positioning column
⑥Material:NO-PA66 94V-0:N2-PA66 94V-2
⑦Planting Category:
V-All Gold-Plated:G:Gold-Plated Contact
S-SilverPlating;*01-Gold Flash;*02-2u";*03-3u"
*05-5u":10-10u" :15-15u":*30-30u":*50-50u"
N-Plating Nickel 30u" ;
SN-Bright tin plating 70u" SW-Fog Tin plating
⑧Color:Blank-natural color

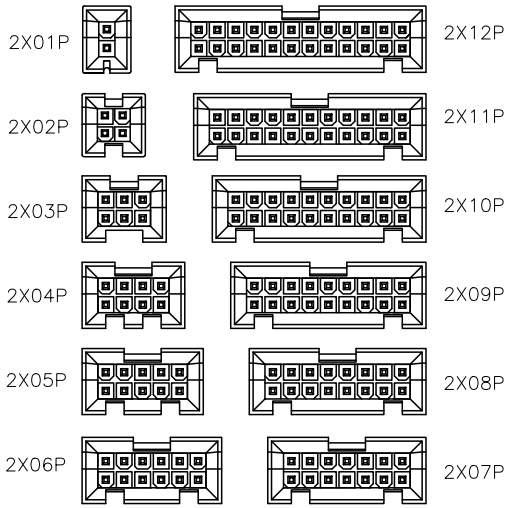

Specifications:
规格:
Voltage rating:600V AC/DC
额定电压：600V AC/DC
Current rating:7A AC/DC
额定电流：7A AC/DC
Withstanding voltage:1500V AC/minute
耐受电压：1500V AC/分钟
Temperature range:-25℃-+85℃
温度范围：-25℃-+85℃
Insulation resistance:≥1000MΩ
绝缘电阻：≥1000MΩ
Contact resistance:≤10mΩ
接触电阻：≤10mΩ
After environmental testing:≤20mΩ
环境测试后：≤20兆欧

poles	Dimensions(mm)		poles	Dimensions(mm)	
	A	B		A	B
2x01	/	10.80	2x07	25.20	36.00
2x02	4.20	15.00	2x08	29.40	40.20
2x03	8.40	19.20	2x09	33.60	44.40
2x04	12.60	23.40	2x10	37.80	48.60
2x05	16.80	27.60	2x11	42.00	52.80
2x06	21.00	31.80	2x12	46.20	57.00

X9357WV-2xXXB-N0SN	Nylon 66 UL 94V-0	Phorphos Bronza	Tin-Plated	X9357HM-B
X9357WV-2xXXB-N2SN	Nylon 66 UL 94V-2	Phorphos Bronza	Tin-Plated	X9357HM-B
PART NO	Material	Material(Pin)	Finish(Pin)	Suitable XKB Housing

AuGLAR	±5°
X.	±0.40
X.x	±0.30
X.xx	±0.20
X.xxx	±0.15
UNSPECIFIED TOLERAuCES	

XKB Connection 星创

DESIGN	阿树	VIEW:	MODEL TYPE: 4.20 mm Crimp Style Connector
CHECKED		UNIT: mm/in	PART NO.: X9357WV-2xXXB-N0SN
APPROVED		SIZE: A4	DWG NO.:

XKB INDUSTRIAL PRECISION CO.,LIMITED

SCALE	PAGE	REVISION
N/A	1/1	A1