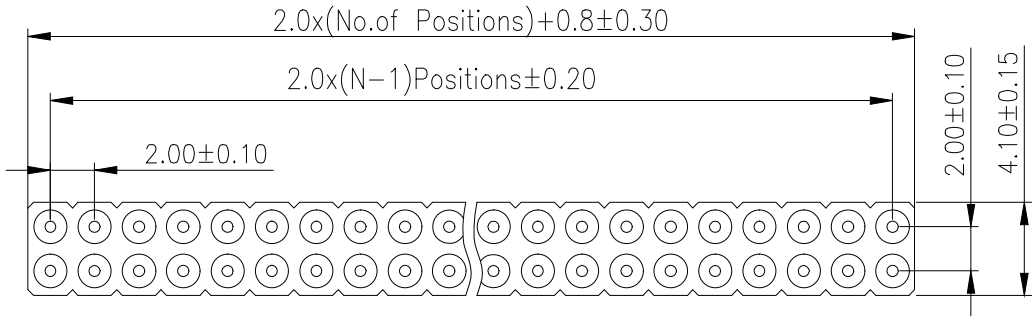

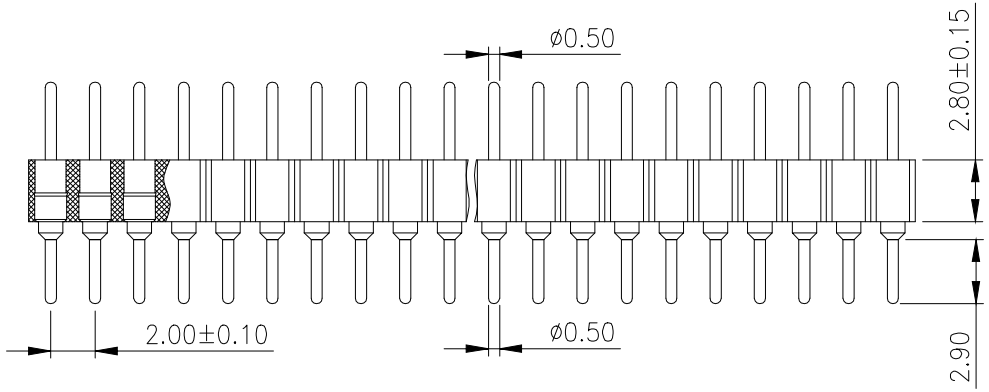

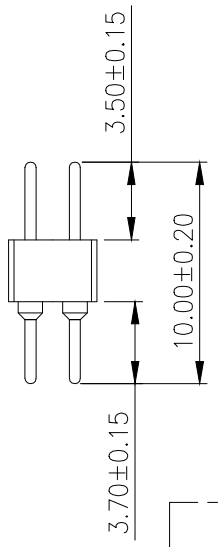

SPECIFICATIONS
Current Rating:2.0AMP
Contact Resistance:20mΩ Max
Dielectric Strength:Min 1000V RMS
Operation Temperature:−40°c to +105°c

Contact Material:Brass
Contact Plating:Au Over Ni
Insulator Material:Polyester(UL94V−0)
Standard: PPS
Soldering Temperature: 260°C±5° 5S

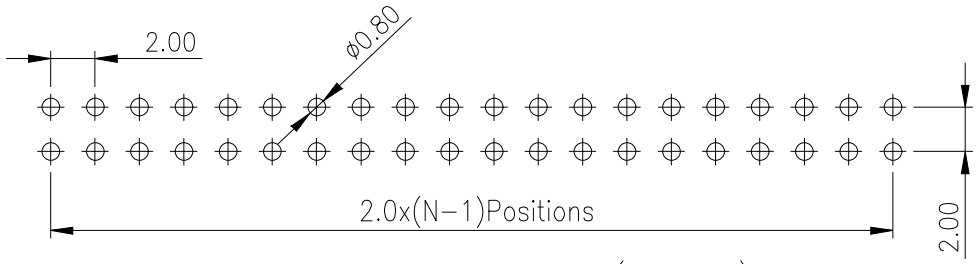

Recommended P.C.B Layout(Top Side)
(PCB BOARD TOLERANCE±0.05)

Ordering Information

PZ 200 - * - N - Z - ** - C

- No.of Rows: 1=Single Row, 2=Dual Row
- No.of Pins: 2−40Pin
- Type: Z=直针, W=弯针, S=立贴, WS=卧贴
- Contact Plating: G0:Gold Flash, G1:1u" Gold, G2:3u" Gold, G3:5u" Gold, G4:10u" Gold, G5:15u" Gold, G6:30u" Gold, S0:Gold Flash/Tin, S1:Tin
- Round Pin (圆针)

			GENERL TOLERANCE	制 图 DRAWING		深圳市华灿天禄电子有限公司 ShenzhenhuacantianluELECTRONICS CO.,LTD			
			DIM TOL	审 核 CHECK					
			X.X ±0.30	批 准 APPROVAL		产品名称 TITLE	2.0 双排 直排针 塑高3.0 (上针0.5 下针0.5)	版 本 REV.	A
1	初版发行		X.XX ±0.20	比 例 SCALE		产品料号 PART NO.	PZ200-2-N-Z-XX-C	单 位 UNITS	mm
序号 No.	变更内容 MODIFY CONTENT	日 期 MODIFY DATE	X.XXX ±0.10	投 影 Projection		材 料 MATERIAL		页 次 SHEET	1/1
			Angle ±3.0°						