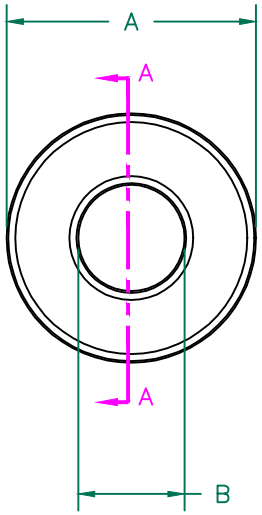

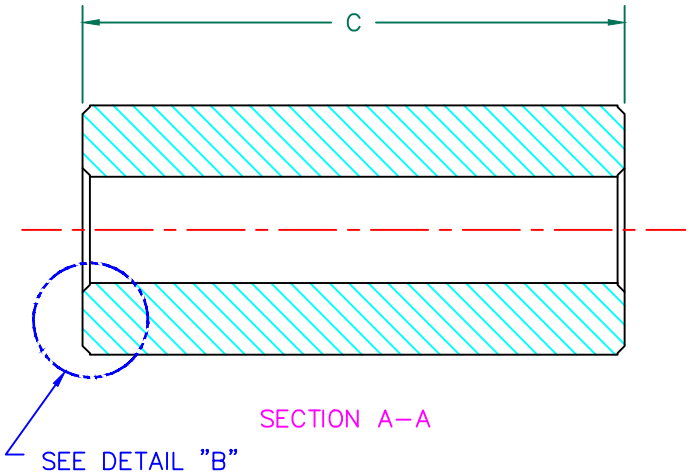

IMPEDANCE (Z)			
Frequency	25 MHz	100 MHz	300 MHz
Nominal (REF)	148 Ω	262 Ω	378 Ω
Minimum	- Ω	210 Ω	- Ω

Z vs. FREQUENCY
(REF. ONLY)

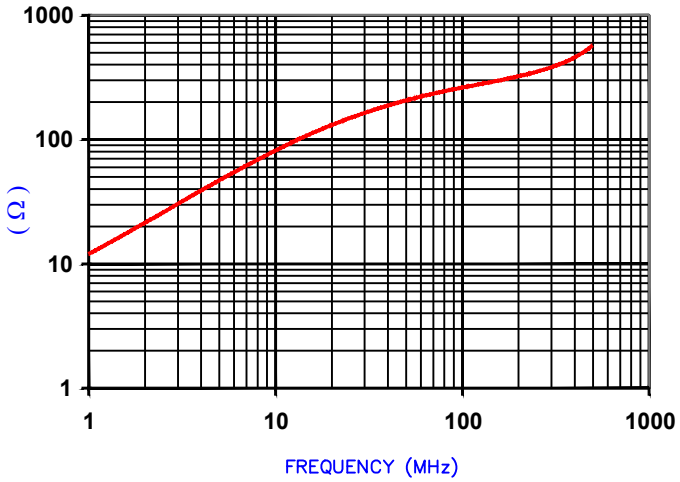

AGILENT E4991A Impedance/Material Analyzer
HP 16092A Test Fixture, REF# 5900

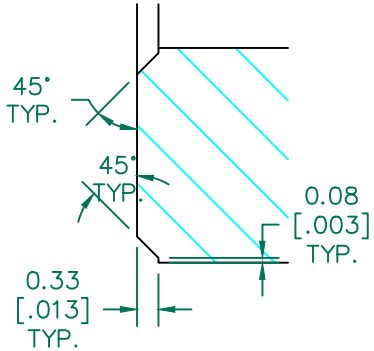

CHAMFER
DETAIL A
SCALE" 6:1

FERRITE CORE DIMENSIONS (SPEC): mm [in]

A	11.50 [.453]	±	0.30 [.012]
B	4.90 [.193]	±	0.20 [.008]
C	25.00 [.984]	±	0.50 [.020]

WEIGHT/1000 10.48 kgs [23.10 Lbs]

NOTES: UNLESS OTHERWISE SPECIFIED

1. COSMETIC SPECIFICATION REFER TO WI–QA–038.

SCALE DRAWING 1:1

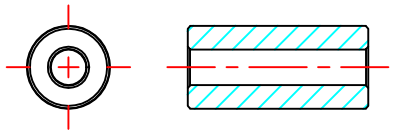

28B0453–000

RoHS

DIMENSIONS ARE IN mm [INCHES].

REV	DESCRIPTION	DATE	INT
C	UPDATE LOGO	06/09/17	QIU
B	ADD IMPED CURVE & Z SPEC VALUES	09/18/07	TMB
A	ORIGINAL DRAFT	06/27/07	TMB

This print is the property of Laird Tech. and is loaned in confidence subject to return upon request and with the understanding that no copies shall be made without the written consent of Laird Tech. All rights to design or invention are reserved.

Laird

PROJECT/PART NUMBER:	REV	PART TYPE:	DRAWN BY:
28B0453–000	C	FERRITE CORE	TMB

DATE:	SCALE:	MATERIAL:
06/27/07	3 : 1	Ferrite
CAD # 28B0453–000–C	TOOL # B0453	