TSCB 4

HOW TO ORDER:

TSCB 4 – □□P – 1□ – X X X Customer Request

Series No. No.of Pole

Color

1	Gray	4	Green	7	Trans-parent
2	Blue	5	Orange	8	Yellow
3	Black	6	Red	9	White
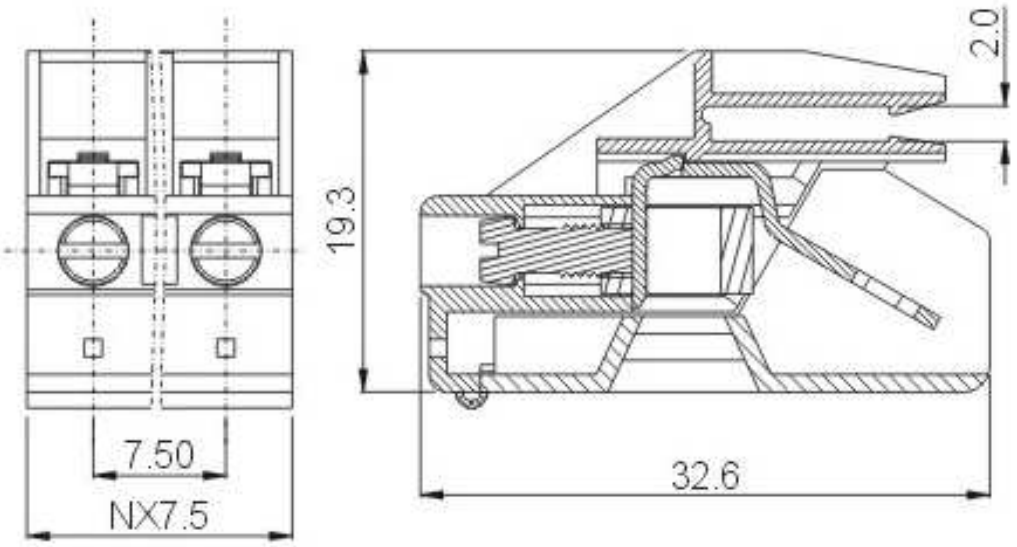
APPROVAL		
Electrical		
Standard	UL	IEC
Rated voltage	300V	450V
Rated current	20A	32A
Wire range	20-10AWG	0.5-4.0mm^2
Withstanding voltage	AC2500V/1Min	
Mechanical		
Torque	0.5Nm(4.4Lb-In.)	
Ambient temperature	-40°C~+105°C	
Strip length	10-12mm	
Dimensions		
Pitch	7.5mm(.295")	
Poles	1P-3P	
Material		
Housing	PA66,UL94V-0	
Screws	M3,Brass,Ni plated	
Contact	Copper,Tin plated	
Cage	Brass,Ni plated