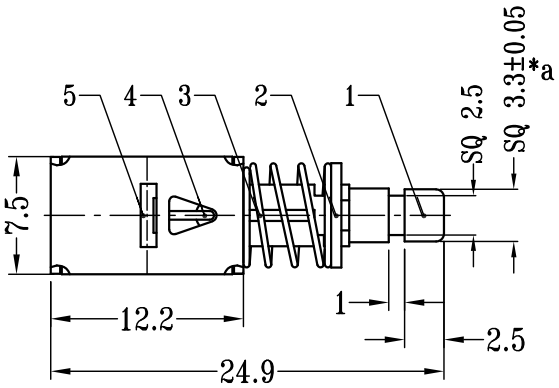

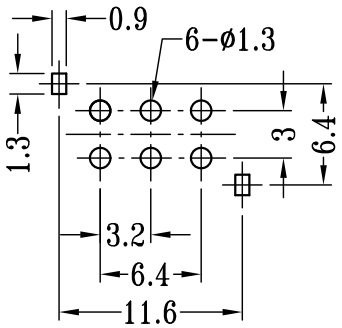

P.C.B LAYOUT
BOTTOM VIEW

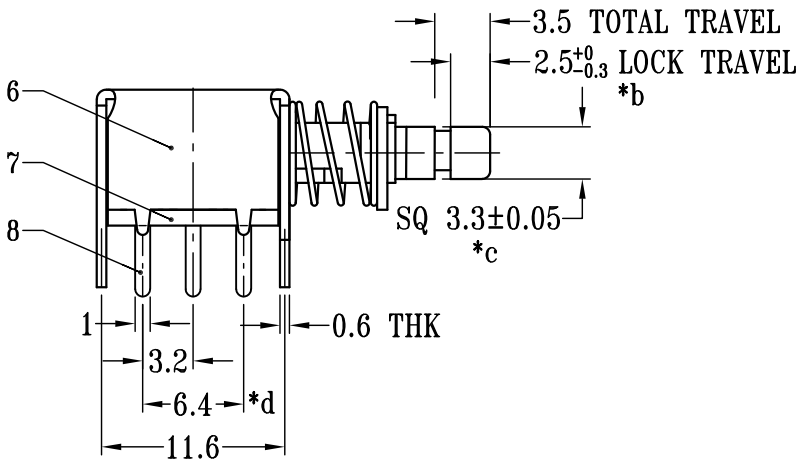

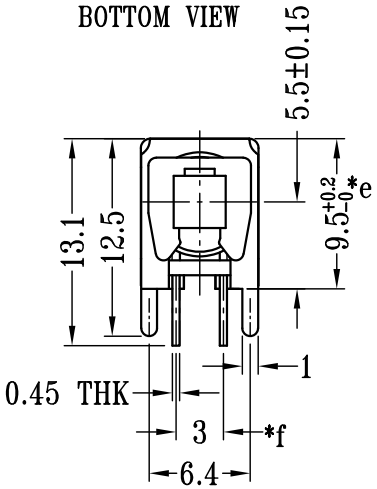

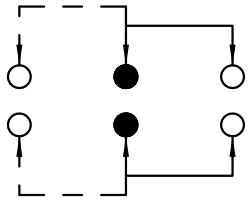

SCHEMATIC (NON-SHORTING)

PS-22F53XX

- PUSH SWITCH
- G-Switch P/N
- N=NO LOCK
  L=LOCK
- A=黑色
  B=红色
  C=蓝色
  D=其它

G-Switch Specification:

Electrical Specifications：0.5A 30VDC
Contact Resistance ：≤100mΩ
Insulation Resistance：≥100MΩ DC125V
Withstand Voltage：AC125V 1 minute
Operating Temperature：-25°C~+65°C
Storage Humidity：≤85%RH
Electrical Life：10,000
Mechanical Life：100,000

Pb Process Capable | RoHS Compliant 2002/95/EC | HALOGEN Compliant Halogen Free

品赞科技 G-Switch®	G-Switch Electronic (HongKong) CO.,Ltd.				
Unless otherwise specified, Tolerance: X. ±0.30, X.x ±0.20, X.xx ±0.15, X.xxx ±0.10, Angles ±3°	DESIGN Bright Lee	DATE 2016.05.29	Molde code: PS-22F53		
	CHECKED	DATE			
	APPROVED	DATE			
	http://www.dg-switch.com		REV.: X1	SCALE: 4:1	UNIT: mm
	TEL:0769-82388879		SIZE: A4	SHEET: 1/1	