**Ratings**
Voltage: 300 V
Temperature: -25 ~ 80 °C
Flammability: VW-1

**Conductor**
Conductor count: 1
Gauge: 18 AWG 0.82 mm²
Material: tinned copper strands
Strand size: ∅0.16 x 41
Resistance at 20 °C: 23.2 Ω/km max

**Insulator**
Material: PVC
Color: white
Diameter: ∅2.05 ±0.10 mm
Nominal thickness: 0.41 mm
Resistance at 20 °C: 10 MΩ/km min

**Shield**
Type: spiral
Material: tinned copper strands
Stranding: ∅0.16 x 41
Coverage: 90% minimum

**Outer jacket**
Material: PVC
Color: black
Diameter: ∅3.4 ±0.15 mm
Nominal thickness: 0.50 mm

**Wire marking**: E339579 UL AWM STYLE 1185 18 AWG 80°C 300V VW-1 - - - cUL AWM I A 80°C 300V FT1 TENSILITY

**Tests**
Insulation tensile strength: 2.11 kgf/mm²
Jacket tensile strength: 1.05 kgf/mm²
After aging at 113 ±2 °C for 7 days:
Minimum tensile strength 70 % original
Minimum elongation 65 % original
Heat shock: 121 ±1 °C /1 hour, no observed degradation
Deformation: 121 ±1 °C /1 hour, ≤ 50 %
Cold bend: -10 ±2 °C /1 hour, no observed cracking

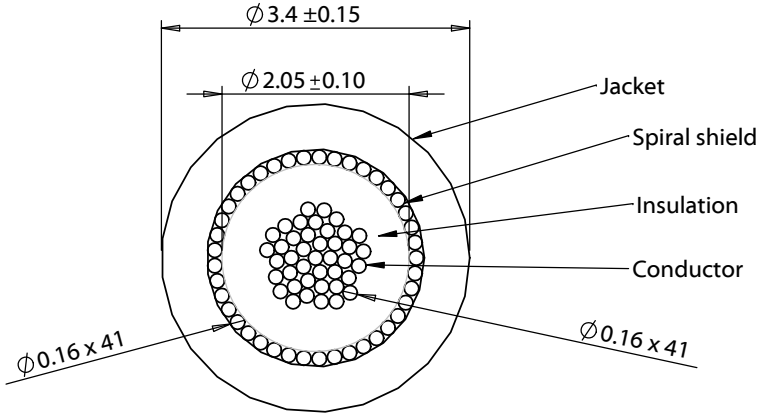


| Revision: | Date: | Description: |
|---|---|---|
| A | 06/20/2014 | Initial release |
| A1 | 09/07/2018 | Increased operating temperature range |
| | | |
| | | |
| | | |

Prepared: AW Digitally signed by AW Date: 2018.09.07 08:23:53 -07'00'

Verified: PS Digitally signed by PS Date: 2018.09.07 11:52:09 -07'00'

Dimensions are in millimeters.
Tolerances:
X: ± 0.5 mm
X.X: ± 0.3 mm
X.XX: ± 0.05 mm

Notes:
RoHS and REACH compliant

Function test: no open, no short circuit, no intermittent

Description:
Wire, 1C TS, 18 AWG, UL1185, 300V, 80C, 3.4 mm, shielded, VW-1, PVC

TENSILITY
tel 1.541.323.3228 800 877.670.7118
fax 1.541.323.4202 web tensility.com

Size: A
Part number: 30-00335
Scale: 12:1
Sheet 1 of 1

To see a custom version of this cable assembly, call Tensility at 541-323-3228 or email engineering@tensility.com

5 4 3 2 1