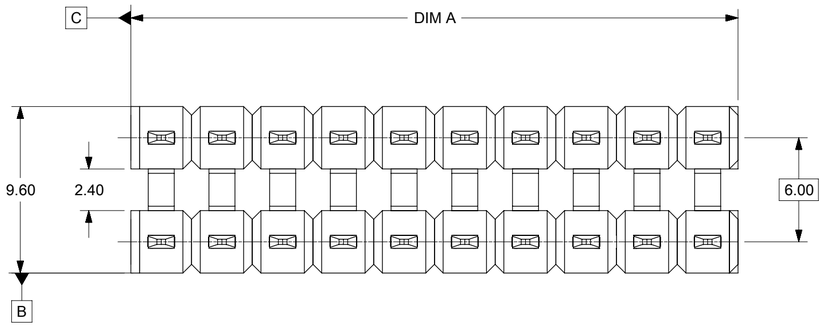

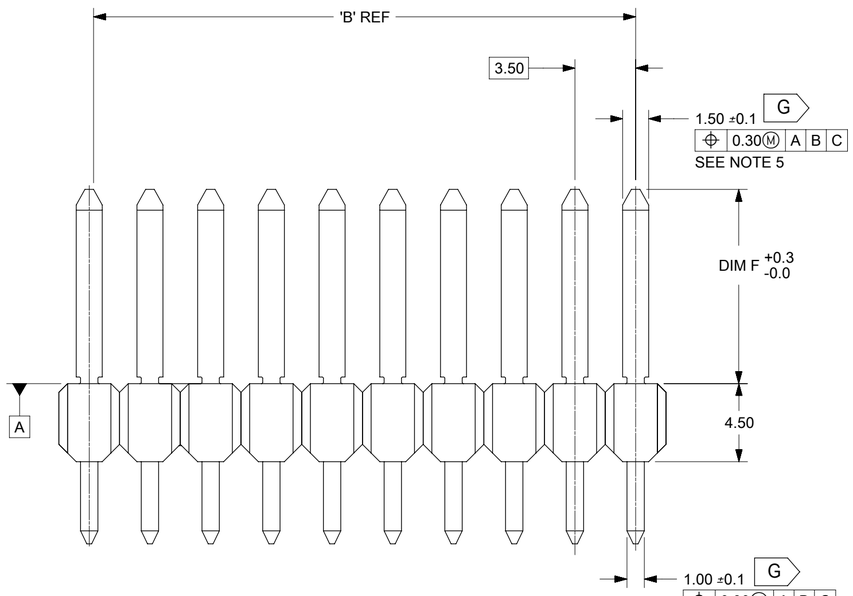

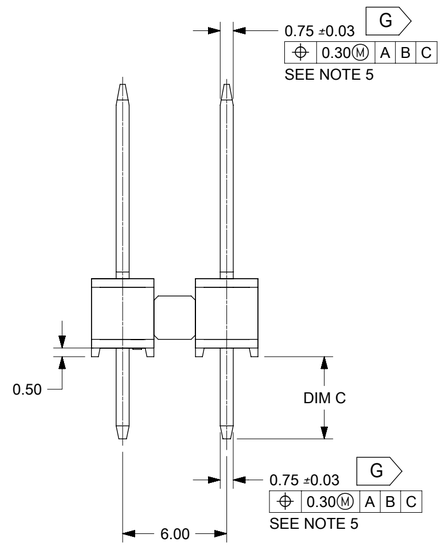

NOTES:

1. TERMINAL MAT'L: ALLOY C26000, CARTRIDGE BRASS
2. WAFER MAT'L: 30% GLASS FILLED LCP, 94V-0, COLOR BLACK.
3. TERMINAL PLATING:
   OPTION 4 - 1.5µm MIN MATTE TIN OVERALL OVER 1.25µm NICKEL OVERALL
   OPTION 1 - 2.5µm MIN MATTE TIN OVERALL OVER 1.25µm NICKEL OVERALL
   OPTION 2 - 1.25m NICKEL OVERALL 2.5µm MIN SELECT MATTE TIN PC TAIL
   AREA 0.05-0.25µm SELECT GOLD CONTACT AREA
   OPTION 3 - 1.25m NICKEL OVERALL 2.5µm MIN SELECT MATTE TIN PC TAIL
   AREA 0.75µm SELECT GOLD CONTACT AREA
4. HEADER ASSEMBLIES ARE TUBE PACKAGED PER PK-36518-340.
5. ALL THE POSITIONAL TOLERANCES SHOULD BE MEASURED AT TIP OF THE TERMINALS.
6. DATUMS SHOULD BE CONSIDERED FROM THE EDGES OF THE HOUSING.
7. POSITION TOLERANCE OF PIN AT MATING SIDE SHOULD BE MAINTAINED AT 0.3MM IN THE FINAL MODULE BY CUSTOMER.
8. G DENOTES DIMENSIONS THAT CAN BE QUALIFIED WITH A GAUGE
9. BLADE GEOMETRY DOES NOT CONFORM TO USCAR SPECIFICATIONS
10. PLEASE REFER USCAR WEBSITE FOR 1.5mm DIRECT CONNECT INTERFACE (SHROUD) DETAILS
11. PLEASE REFER SD-33472-0001 FOR 2 X 10 SHROUD DETAILS.

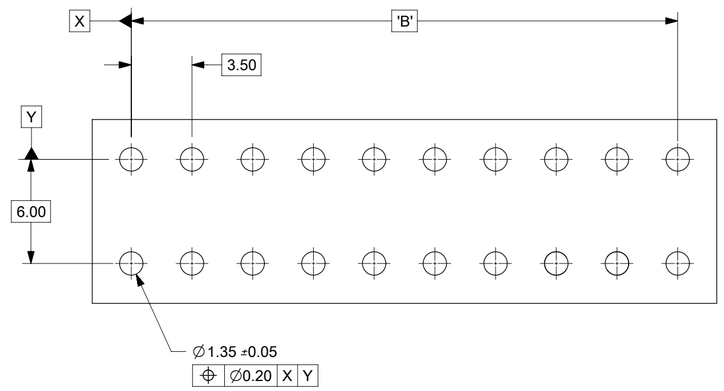

RECOMMENDED PCB LAYOUT

SYMBOLS	
E = 0	
E = 0	
E = 0	
S = 0	
= 0	
C = 0	
= 0	
= 0	
V = 0	

THIS DRAWING CONTAINS INFORMATION THAT IS PROPRIETARY TO MOLEX ELECTRONIC TECHNOLOGIES, LLC AND SHOULD NOT BE USED WITHOUT WRITTEN PERMISSION

DIMENSION UNITS	SCALE
mm	4:1

GENERAL TOLERANCES (UNLESS SPECIFIED)

ANGULAR TOL	±	0.5 °
4 PLACES	±	
3 PLACES	±	
2 PLACES	±	0.13
1 PLACE	±	0.25
0 PLACES	±	

DRAFT WHERE APPLICABLE MUST REMAIN WITHIN DIMENSIONS

CURRENT REV DESC:

EC NO: 624897
DRWN: RYELAVATTITH 2019/09/26
CHK'D: AKUMARMS 2019/10/01
APPR: SNAYAK01 2019/10/04

INITIAL REVISION:
DRWN: TMCCLELL 2005/03/10
APPR: MBANAKIS 2005/03/15

THIRD ANGLE PROJECTION | DRAWING: A2-SIZE | SERIES: 75757

molex

MX150 DUAL ROW
UNSHROUDED VERTICAL HEADER ASSEMBLY

PRODUCT CUSTOMER DRAWING

DOCUMENT NUMBER	DOC TYPE	DOC PART	REVISION
SD-75757-002	PSD	001	G3

MATERIAL NUMBER	CUSTOMER	SHEET NUMBER
SEE TABLE	GENERAL MARKET	1 OF 2

DOCUMENT STATUS	P1	RELEASE DATE	2019/10/04 12:14:03

FORMAT: 987654321-prod-A2
REVISION: 1.1
DATE: 2018/8/14

CKT SIZE	PLATING OPTION	MATERIAL NUMBER	STATUS	"C" DIM	"F" DIM	MATERIAL NUMBER	STATUS	"C" DIM	"F" DIM	MATERIAL NUMBER	STATUS	"C" DIM	"F" DIM	"A" DIM	"B" DIM
2 x 2	1	75757-5121		3.05	16.09	75757-1121		3.05	11.20	75757-1122	OBSOLETE	4.75	11.20	7.0	3.50 REF
	2	75757-5221				75757-1221				75757-1222	OBSOLETE				
	3	75757-5321	OBSOLETE			75757-1321				75757-1322	OBSOLETE				
	4	75757-5421				75757-1421				75757-1422	OBSOLETE				
2 x 3	1	75757-5131				75757-1131				75757-1132	OBSOLETE			10.5	7.00
	2	75757-5231	OBSOLETE			75757-1231				75757-1232	OBSOLETE				
	3	75757-5331	OBSOLETE			75757-1331				75757-1332	OBSOLETE				
	4	75757-5431				75757-1431				75757-1432					
2 x 4	1	75757-5141				75757-1141	OBSOLETE			75757-1142	OBSOLETE			14.0	10.50
	2	75757-5241				75757-1241				75757-1242	OBSOLETE				
	3	75757-5341				75757-1341	OBSOLETE			75757-1342	OBSOLETE				
	4	75757-5441				75757-1441				75757-1442					
2 x 6	1	75757-5161				75757-1161				75757-1162	OBSOLETE			21.0	17.50
	2	75757-5261				75757-1261				75757-1262	OBSOLETE				
	3	75757-5361				75757-1361	OBSOLETE			75757-1362	OBSOLETE				
	4	75757-5461				75757-1461				75757-1462	OBSOLETE				
2 x 8	1	75757-5181				75757-1181				75757-1182				28.0	24.50
	2	75757-5281	OBSOLETE			75757-1281	OBSOLETE			75757-1282	OBSOLETE				
	3	75757-5381				75757-1381	OBSOLETE			75757-1382	OBSOLETE				
	4	75757-5481				75757-1481				75757-1482	OBSOLETE				
2 x 10	1	75757-5101				75757-1101				75757-1102				35.0	31.50
	2	75757-5201				75757-1201	OBSOLETE			75757-1202	OBSOLETE				
	3	75757-5301				75757-1301	OBSOLETE			75757-1302	OBSOLETE				
	4	75757-5401				75757-1401				75757-1402	OBSOLETE				

SYMBOLS	
F/A	= 0
F/C	= 0
F/P	= 0
S	= 0
▼	= 0
C	= 0
⊠	= 0
■	= 0
V	= 0

THIS DRAWING CONTAINS INFORMATION THAT IS PROPRIETARY TO MOLEX ELECTRONIC TECHNOLOGIES, LLC AND SHOULD NOT BE USED WITHOUT WRITTEN PERMISSION

DIMENSION UNITS	SCALE
mm	NTS

GENERAL TOLERANCES (UNLESS SPECIFIED)

ANGULAR TOL	±	0.5 °
4 PLACES	±	
3 PLACES	±	
2 PLACES	±	0.13
1 PLACE	±	0.25
0 PLACES	±	

DRAFT WHERE APPLICABLE MUST REMAIN WITHIN DIMENSIONS

CURRENT REV DESC:

EC NO: 624897
DRWN: RYELAVATTITH 2019/09/26
CHK'D: AKUMARMS 2019/10/01
APPR: SNAYAK01 2019/10/04

INITIAL REVISION:
DRWN: TMCCLELL 2005/03/10
APPR: MBANAKIS 2005/03/15

THIRD ANGLE PROJECTION | DRAWING: A2-SIZE | SERIES: 75757

molex

MX150 DUAL ROW
UNSHROUDED VERTICAL HEADER ASSEMBLY

PRODUCT CUSTOMER DRAWING

DOCUMENT NUMBER	DOC TYPE	DOC PART	REVISION
SD-75757-002	PSD	001	G3

MATERIAL NUMBER	CUSTOMER	SHEET NUMBER
SEE TABLE	GENERAL MARKET	2 OF 2

DOCUMENT STATUS	P1	RELEASE DATE	2019/10/04 12:14:03

FORMAT: dim-prod-A2
REVISION: 1.0
DATE: 2016/06/14