Kinghelm®

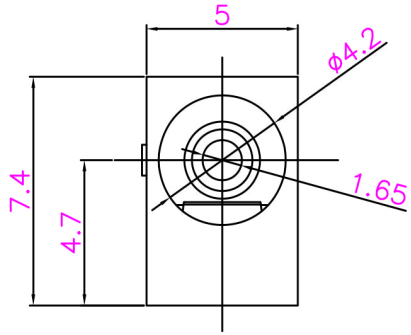

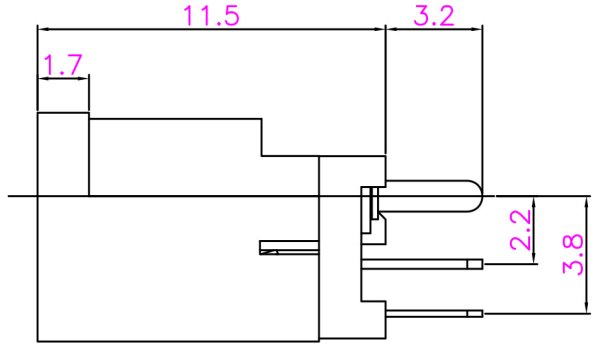

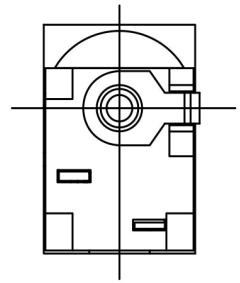

P. C. B Layout (Top view)

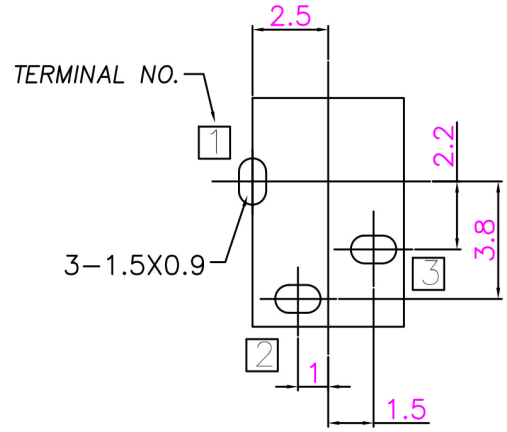

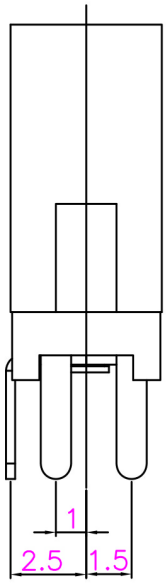

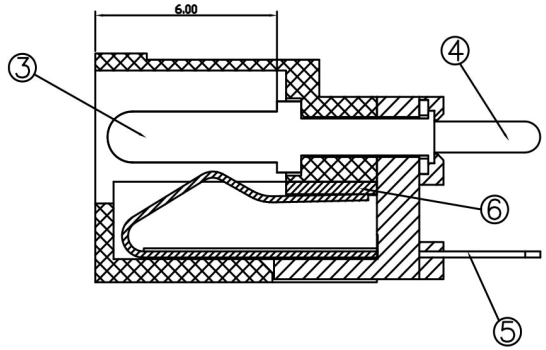

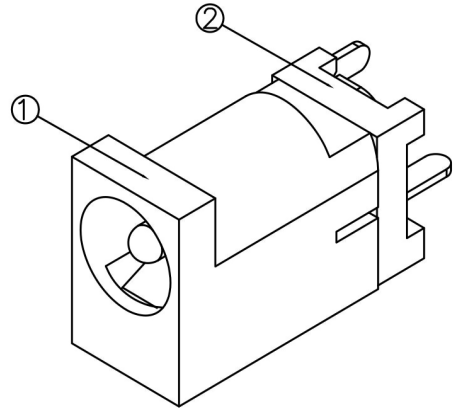

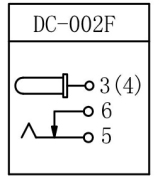

SPECIFICATION

1. RATING: 1A DC 30V ;
2. CONTACT RESISTANCE: Max 30mΩ;
3. INSULATION RESISTANCE: Min 100MΩ DC 500V;
4. WITHSTANDING VOLTAGE: AC 500V (50Hz) AT 0.5A FOR 1 MINUTE;
5. LIFE TEST: ≥5000 CYCLES;
6. EXTRACTION FORCE: Min 0.3Kg;
7. INSERTION FORCE: Max 3Kg;
8. WORK TEMPERATURE: -30° C～ 70° C;
9. APPEARANCE IS GOOD FINISHED, NOT EXIST RUST, FLAW CRACK AND BAD PLATING;
10. SOLDERING CAN MEET 230° C±5° C, 3-5 SECOND.

NO.	DESCRIPTION	QTY	MATERIAL	REMARK
⑥	Shunt terminal 3	1	Brass t=0.4	Silver Plating
⑤	Tip spring 2	1	Stainless steel t=0.2	Silver Plating
④	Center pin terminal 1	1	Brass t=0.3	Silver Plating
③	Center pin 1	1	Brass	CuSn/Nickel Plating
②	Cover	1	PBT UL94V-0	Black
①	Housing	1	PBT UL94V-0	Black

TITLE: DC POWER JACK	DRAWING NO: DC-002F	SHEET: 1 OF 1	GENERAL TOLERANCE
		SCALE: 1:1 / UNIT: mm	DIM: X.X±0.3, X.XX±0.2, X.XXX±0.1 ANGLE: 3°
	DATE	3RD ANGLE / VER: 2	

REV	DESCRIPTION	APPR.	DATE

DESIGNER BY:
CHECK BY:
APPROVED BY:

深圳市金航标电子有限公司 WWW.BDS666.COM

KH-DC-002F-1.3 0755-83044319