2 BAY STAC64 RIGHT ANGLE HEADER ASSEMBLY
(P/N: 34708-2012 SHOWN)

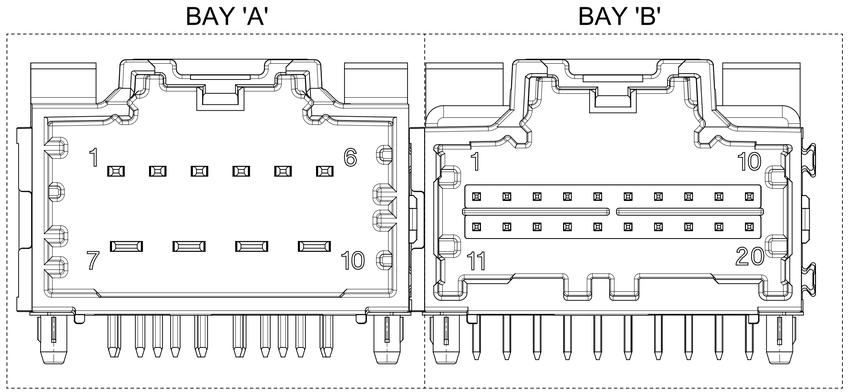

NOTES: VALID UNLESS OTHERWISE SPECIFIED
1. GENERAL:

a. CONNECTOR HEADER MUST BE VALIDATED TO THE FOLLOWING FUNCTIONAL REQUIREMENTS:
PRODUCT SPECIFICATION:
8-20 CKT 0.64 PRODUCT SPEC: PS-34729-020/PS-31408-100
10/14 CKT HYBRID PRODUCT SPEC: PS-31372-100
b. APPLICATION REQUIREMENTS (REFERENCE ONLY):
APPLICATION SPECIFICATION: AS-34729-020/AS-31408-100
c. PACKAGING SPECIFICATION PER MOLEX DRAWING PK-31300-892 (TRAY)
d. PACKAGING SPECIFICATION PER MOLEX DRAWING PK-31301-063 (TUBE)
e. PACKAGING SPECIFICATION PER MOLEX DRAWING PK-31300-894 (ALT TRAY)

2. DESIGN: MATERIALS:
a. SHROUD (PLASTIC HOUSING):
RESIN - SPS 30%GF
COLOR:
POL A - BLACK
POL B - GRAY
POL C - BROWN
POL D - GREEN
b. 0.64mm PINS:
BASE MATERIAL: C26000
PLATING TYPE: AS NOTED
1.5/2.8mm BLADES:
BASE MATERIAL: C19400
PLATING TYPE: AS NOTED

3. PLATING REQUIREMENTS:
a. UNDERPLATING - OVERALL NICKEL
b. OVERPLATING - OVERALL TIN

4. FOR ADDITIONAL INFORMATION AND DIMENSIONS OF INDIVIDUAL BAYS
REFER TO THE FOLLOWING SINGLE BAY DRAWINGS:
8-20 CKT 0.64: SD-34691-100
10 CKT HYBRID: SD-34696-100
14 CKT HYBRID: SD-34773-010

5. G DENOTES DIMENSIONS THAT MAY BE QUALIFIED WITH A GAUGE.

QUALITY SYMBOLS	
A	= 0
E	= 0
F	= 0
	= 0
C	= 0
	= 0
	= 0
G	= 0

THIS DRAWING CONTAINS INFORMATION THAT IS PROPRIETARY TO MOLEX ELECTRONIC TECHNOLOGIES, LLC AND SHOULD NOT BE USED WITHOUT WRITTEN PERMISSION

EC NO: 612618	DRWN: SHANDITHAVAL	2019/02/22
	CHK'D: RBAUMAN	2019/02/23
	APPR: RBAUMAN	2019/02/23
REV	Y1	

GENERAL TOLERANCES (UNLESS SPECIFIED)	
ANGULAR TOL ±	1.0 °
4 PLACES	±
3 PLACES	±
2 PLACES	± 0.13
1 PLACE	± 0.25
0 PLACES	±

DRAFT WHERE APPLICABLE MUST REMAIN WITHIN DIMENSIONS

DIMENSION UNITS	SCALE
mm	4:1
DRWN BY: MBAILEY	DATE: 2008/08/14
CHK'D BY: CDILLON	DATE: 2009/02/17
APPR BY: SMARCEAU	DATE: 2008/08/14
DRAWING SIZE: D	THIRD ANGLE PROJECTION

molex®

2-BAY STAC64 RIGHT ANGLE
HEADER ASSEMBLY SALES DRAWING

PRODUCT CUSTOMER DRAWING

SERIES	MATERIAL NUMBER	CUSTOMER
34708	SEE CHART	GENERAL MARKET

DOCUMENT NUMBER	DOC TYPE	DOC PART	SHEET NUMBER
SD-34708-200	PSD	001	1 OF 6

RELEASE STATUS	P1	RELEASE DATE	2019/02/23 23:33:00

PCPRINT, master-final-v3
Template: 80000-1150
Date: 2011/10/06

DIMENSIONAL CHART FOR MULTIBAY CONFIGURATION:

2 BAY PART NUMBER (ALT TRAY)	2 BAY PART NUMBER (TUBE PKG)	2 BAY PART NUMBER (TRAY PKG)	BAY A			BAY B			DIM 'A'	DIM 'B'	DIM 'C'	DIM 'D'
			CKT	TYPE	POL	CKT	TYPE	POL				
TBD	34708-7000	34708-2000	20	0.64mm	A	20	0.64mm	B	66.94	64.47	27.94	27.94
TBD	TBD	34708-2001	20	0.64mm	B	20	0.64mm	C	66.94	64.47	27.94	27.94
TBD	TBD	34708-2002	20	0.64mm	C	20	0.64mm	D	66.94	64.47	27.94	27.94
TBD	34708-7003	34708-2003	20	0.64mm	C	8	0.64mm	A	51.70	49.23	27.94	12.70
TBD	34708-7004	34708-2004	20	0.64mm	C	12	0.64mm	A	56.78	54.31	27.94	17.78
TBD	TBD	34708-2005	14	HYBRID	C	20	0.64mm	C	66.94	64.47	27.94	27.94
TBD	TBD	34708-2006	16	0.64mm	B	20	0.64mm	B	61.86	59.39	22.86	27.94
TBD	TBD	34708-2007	16	0.64mm	C	20	0.64mm	C	61.86	59.39	22.86	27.94
TBD	TBD	34708-2008	20	0.64mm	A	20	0.64mm	C	66.94	64.47	27.94	27.94
TBD	TBD	34708-2009	8	0.64mm	A	8	0.64mm	B	36.46	33.99	12.70	12.70
TBD	TBD	34708-2010	12	0.64mm	A	10	HYBRID	B	56.78	54.31	17.78	27.94
TBD	TBD	34708-2011	20	0.64mm	C	20	0.64mm	B	66.94	64.47	27.94	27.94
TBD	TBD	34708-2012	10	HYBRID	A	20	0.64mm	C	66.94	64.47	27.94	27.94
TBD	TBD	34708-2013	12	0.64mm	A	20	0.64mm	B	56.78	54.31	17.78	27.94
TBD	TBD	34708-2014	14	HYBRID	C	20	0.64mm	B	66.94	64.47	27.94	27.94
TBD	TBD	34708-2015	20	0.64mm	B	14	HYBRID	C	66.94	64.47	27.94	27.94
TBD	TBD	34708-2016	12	0.64mm	B	20	0.64mm	D	56.78	54.31	17.78	27.94
TBD	TBD	34708-2017	16	0.64mm	A	8	0.64mm	C	46.62	44.15	22.86	12.70
TBD	TBD	34708-2018	12	0.64mm	A	16	0.64mm	A	51.70	49.23	22.86	17.78
TBD	TBD	34708-2019	20	0.64mm	A	12	0.64mm	A	56.78	54.31	27.94	17.78
TBD	34708-7012	34708-2020	10	HYBRID	A	16	0.64mm	A	61.86	59.39	27.94	22.86
TBD	TBD	34708-2021	16	0.64mm	B	16	0.64mm	A	56.78	54.31	22.86	22.86
TBD	TBD	34708-2022	20	0.64mm	C	10	HYBRID	A	66.94	64.47	27.94	27.94
TBD	TBD	34708-2023	20	0.64mm	A	20	0.64mm	C	66.94	64.47	27.94	27.94
TBD	TBD	34708-2024	8	0.64mm	A	10	HYBRID	A	51.70	49.23	12.70	27.94
TBD	TBD	34708-2025	8	0.64mm	B	10	HYBRID	A	51.70	49.23	12.70	27.94
TBD	TBD	34708-2026	16	0.64mm	A	20	0.64mm	A	61.86	59.39	22.86	27.94
TBD	TBD	34708-2027	8	0.64mm	B	8	0.64mm	B	36.46	33.99	12.70	12.70
TBD	TBD	34708-2028	16	0.64mm	A	8	0.64mm	A	46.62	44.15	22.86	12.70
TBD	TBD	34708-2029	12	0.64mm	A	12	0.64mm	B	46.62	44.15	17.78	17.78
TBD	34708-7030	34708-2030	10	HYBRID	B	10	HYBRID	A	66.94	64.47	27.94	27.94
TBD	TBD	34708-2031	12	0.64mm	B	12	0.64mm	A	46.62	44.15	17.78	17.78
TBD	TBD	34708-2032	20	0.64mm	D	16	0.64mm	B	61.68	59.39	27.94	22.86
TBD	TBD	34708-2033	20	0.64mm	D	16	0.64mm	C	61.86	59.39	27.94	22.86
TBD	TBD	34708-2034	16	0.64mm	B	20	0.64mm	D	61.68	59.39	22.86	27.94
TBD	TBD	34708-2035	16	0.64mm	C	20	0.64mm	D	61.86	59.39	22.86	27.94
TBD	TBD	34708-2036	8	0.64mm	C	16	0.64mm	C	46.62	44.15	12.70	22.86
34708-7537	TBD	34708-2037	16	0.64mm	A	10	HYBRID	B	61.86	59.39	22.86	27.94
34708-7538	TBD	34708-2038	10	HYBRID	A	16	0.64mm	C	61.86	59.39	27.94	22.86
TBD	TBD	34708-2039	14	HYBRID	A	20	0.64mm	D	66.94	64.47	27.94	27.94
TBD	TBD	34708-2040	20	0.64mm	A	8	0.64mm	A	51.70	49.23	27.94	12.70
TBD	TBD	34708-2041	12	0.64mm	B	16	0.64mm	A	51.70	49.23	17.78	22.86
TBD	TBD	34708-2042	16	0.64mm	A	16	0.64mm	A	56.78	54.31	22.86	22.86
TBD	TBD	34708-2043	20	0.64mm	B	20	0.64mm	A	66.94	64.47	27.94	27.94
TBD	TBD	34708-2044	10	HYBRID	A	10	HYBRID	B	66.94	64.47	27.94	27.94
TBD	TBD	34708-2045	20	0.64mm	A	14	HYBRID	B	66.94	64.47	27.94	27.94
TBD	TBD	34708-2046	20	0.64mm	C	14	HYBRID	A	66.94	64.47	27.94	27.94

THIS DRAWING CONTAINS INFORMATION THAT IS PROPRIETARY TO MOLEX ELECTRONIC TECHNOLOGIES, LLC AND SHOULD NOT BE USED WITHOUT WRITTEN PERMISSION

QUALITY SYMBOLS: = 0 / = 0 / = 0 / = 0 / = 0 / = 0 / = 0 / = 0

EC NO: 612618 — 2019/02/22
DRWN: SHANDITHAVAL — 2019/02/23
CHK'D: RBAUMAN — 2019/02/23
APPR: RBAUMAN

REV: Y1

GENERAL TOLERANCES (UNLESS SPECIFIED)
ANGULAR TOL ± 1.0 °
4 PLACES ±
3 PLACES ±
2 PLACES ± 0.13
1 PLACE ± 0.25
0 PLACES ±

DRAFT WHERE APPLICABLE MUST REMAIN WITHIN DIMENSIONS

DIMENSION UNITS: mm
SCALE: 1:1
DRWN BY: MBAILEY — DATE: 2008/08/14
CHK'D BY: CDILLON — DATE: 2009/02/17
APPR BY: SMARCEAU — DATE: 2008/08/14
DRAWING SIZE: D
THIRD ANGLE PROJECTION

molex®

2-BAY STAC64 RIGHT ANGLE
HEADER ASSEMBLY SALES DRAWING

PRODUCT CUSTOMER DRAWING

SERIES	MATERIAL NUMBER	CUSTOMER
34708	SEE CHART	GENERAL MARKET

DOCUMENT NUMBER	DOC TYPE	DOC PART	SHEET NUMBER
SD-34708-200	PSD	001	2 OF 6

RELEASE STATUS: P1 — RELEASE DATE: 2019/02/23 23:33:00

FORMAT: master-b-prod-D
DESIGN: N/A
DATE: 20-Dec

DIMENSIONAL CHART FOR MULTIBAY CONFIGURATION:

2 BAY PART NUMBER (ALT TRAY)	2 BAY PART NUMBER (TUBE PKG)	2 BAY PART NUMBER (TRAY PKG)	BAY A			BAY B			DIM 'A'	DIM 'B'	DIM 'C'	DIM 'D'
			CKT	TYPE	POL	CKT	TYPE	POL				
TBD	TBD	34708-2050	20	0.64mm	A	16	0.64mm	A	61.86	59.39	27.94	22.86
TBD	TBD	34708-2060	10	HYBRID	B	16	0.64mm	A	61.86	59.39	27.94	22.86
TBD	TBD	34708-2070	16	0.64mm	A	12	0.64mm	A	51.70	49.23	22.86	17.78
TBD	TBD	34708-2080	16	0.64mm	A	16	0.64mm	B	56.78	54.31	22.86	22.86
TBD	TBD	34708-2090	16	0.64mm	B	16	0.64mm	C	56.78	54.31	22.86	22.86

RELEASE STATUS	P1	RELEASE DATE	2019/02/23 23:33:00

THIS DRAWING CONTAINS INFORMATION THAT IS PROPRIETARY TO MOLEX ELECTRONIC TECHNOLOGIES, LLC AND SHOULD NOT BE USED WITHOUT WRITTEN PERMISSION

QUALITY SYMBOLS
= 0
= 0
= 0
= 0
= 0
= 0
= 0
= 0

EC NO: 612618 - 2019/02/22
DRWN: SHANDITHAVAL 2019/02/23
CHK'D: RBAUMAN 2019/02/23
APPR: RBAUMAN 2019/02/23
REV Y1

GENERAL TOLERANCES (UNLESS SPECIFIED)
ANGULAR TOL ± 1.0 °
4 PLACES ±
3 PLACES ±
2 PLACES ± 0.13
1 PLACE ± 0.25
0 PLACES ±
DRAFT WHERE APPLICABLE MUST REMAIN WITHIN DIMENSIONS

DIMENSION UNITS: mm
SCALE: 1:1
DRWN BY: MBAILEY DATE: 2008/08/14
CHK'D BY: CDILLON DATE: 2009/02/17
APPR BY: SMARCEAU DATE: 2008/08/14
DRAWING SIZE: D
THIRD ANGLE PROJECTION

molex®

2-BAY STAC64 RIGHT ANGLE
HEADER ASSEMBLY SALES DRAWING

PRODUCT CUSTOMER DRAWING

SERIES	MATERIAL NUMBER	CUSTOMER
34708	SEE CHART	GENERAL MARKET

DOCUMENT NUMBER	DOC TYPE	DOC PART	SHEET NUMBER
SD-34708-200	PSD	001	3 OF 6

FORMAT: 11x8.5 SIZE C
REVISION: D
DATE: 2017/02/06

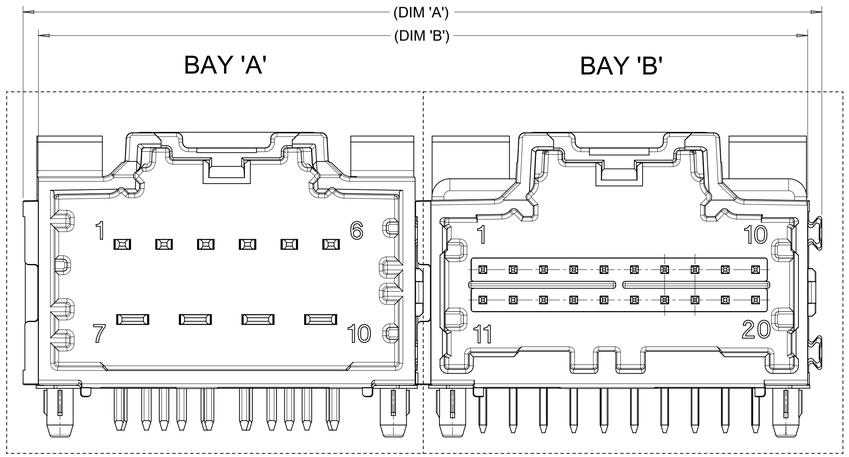

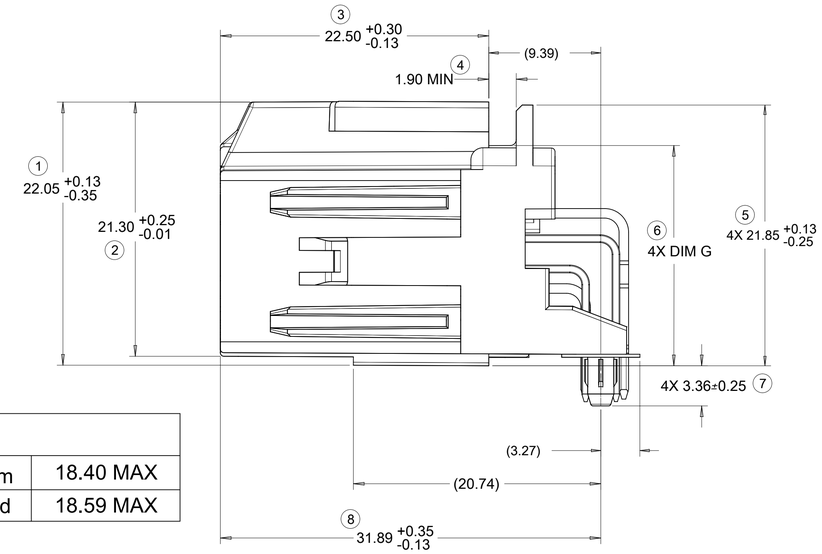

FOR DIM G:	
8-20CKT 0.64mm	18.40 MAX
10/14CKT Hybrid	18.59 MAX

RECOMMENDED PCB LAYOUT

INSERT NECESSARY BAYS USING CHART ON SHEET 2 AND 3

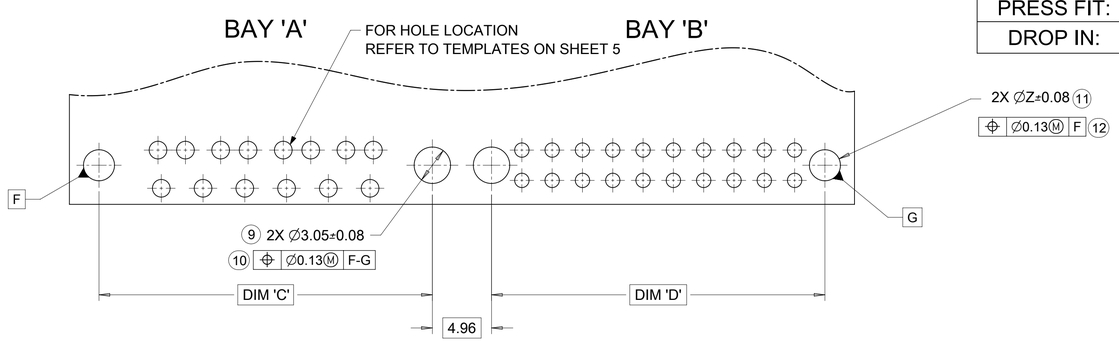

POST HOLE TABLE:

FOR DIM Z:	
PRESS FIT:	2.60
DROP IN:	3.05

ALL CIRCUIT OPTIONS

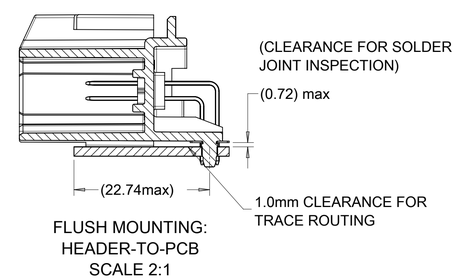

FLUSH MOUNTING:
HEADER-TO-PCB
SCALE 2:1

QUALITY SYMBOLS	
FA	= 0
FC	= 0
FP	= 0
▼	= 0
C	= 0
☒	= 0
■	= 0
G	= 0

THIS DRAWING CONTAINS INFORMATION THAT IS PROPRIETARY TO MOLEX ELECTRONIC TECHNOLOGIES, LLC AND SHOULD NOT BE USED WITHOUT WRITTEN PERMISSION

EC NO: 612618 — 2019/02/22
DRWN: SHANDITHAVAL — 2019/02/23
CHK'D: RBAUMAN — 2019/02/23
APPR: RBAUMAN

REV: Y1

GENERAL TOLERANCES (UNLESS SPECIFIED)

ANGULAR TOL ±	1.0	°
4 PLACES	±	
3 PLACES	±	
2 PLACES	±	0.13
1 PLACE	±	0.25
0 PLACES	±	

DRAFT WHERE APPLICABLE MUST REMAIN WITHIN DIMENSIONS

DIMENSION UNITS	mm
SCALE	4:1
DRWN BY	MBAILEY
DATE	2008/08/14
CHK'D BY	CDILLON
DATE	2009/02/17
APPR BY	SMARCEAU
DATE	2008/08/14
DRAWING SIZE	D
THIRD ANGLE PROJECTION	

molex®

2-BAY STAC64 RIGHT ANGLE
HEADER ASSEMBLY SALES DRAWING

PRODUCT CUSTOMER DRAWING

SERIES	MATERIAL NUMBER	CUSTOMER
34708	SEE CHART	GENERAL MARKET

DOCUMENT NUMBER	DOC TYPE	DOC PART	SHEET NUMBER
SD-34708-200	PSD	001	4 OF 6

RELEASE STATUS	P1	RELEASE DATE	2019/02/23 23:33:00

TEMPLATE, ENGINEERING
DOCUMENT, 11"X17"
DATE: 2017/05/08

14 CKT HYBRID HEADER DETAILS

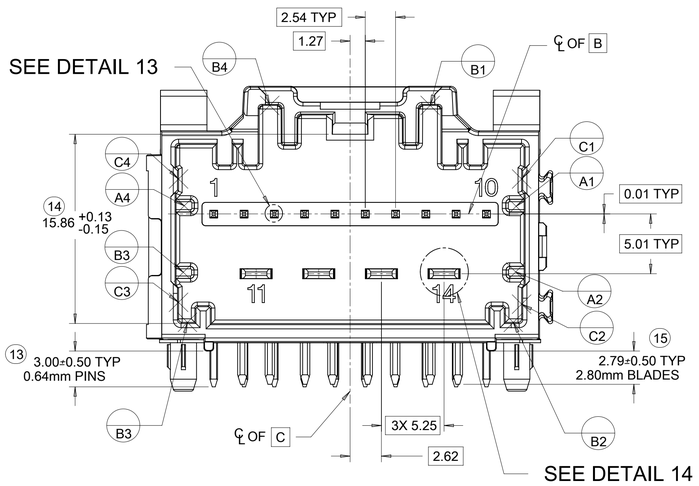

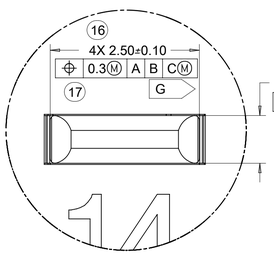

DETAIL 14
SCALE 20:1

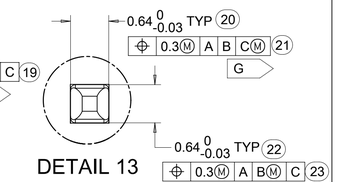

DETAIL 13
SCALE 20:1

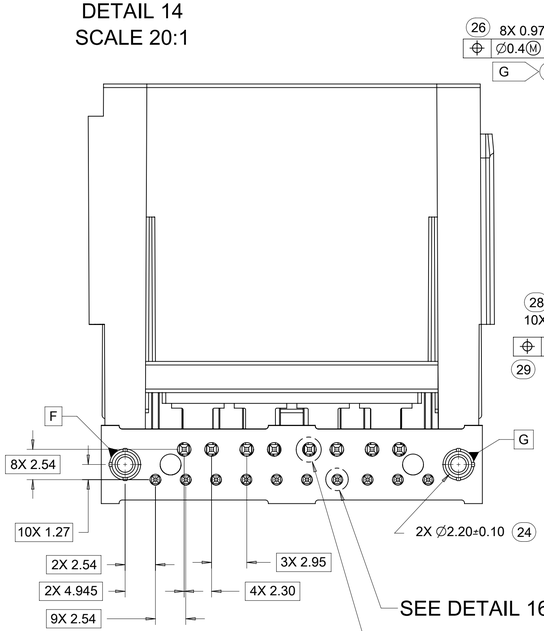

DETAIL 15
SCALE 15:1

DETAIL 16
SCALE 15:1

8-20 CKT 0.64mm HEADER DETAILS

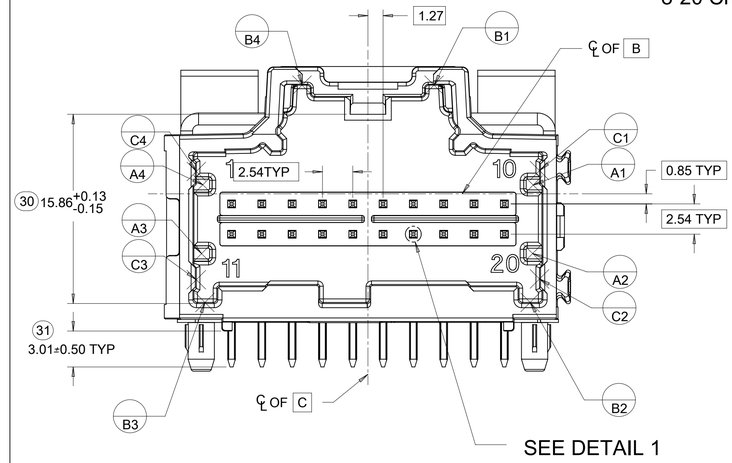

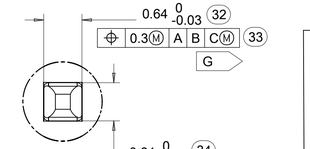

DETAIL 1
SCALE 20:1

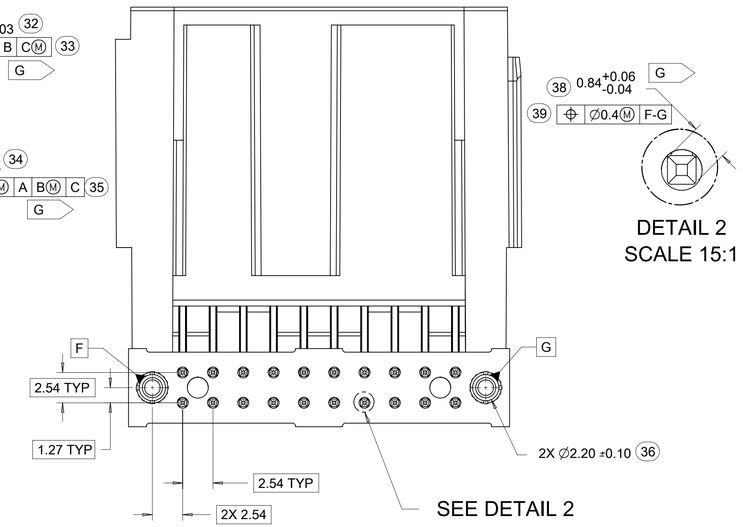

DETAIL 2
SCALE 15:1

10CKT STAC HYBRID HEADER DETAILS

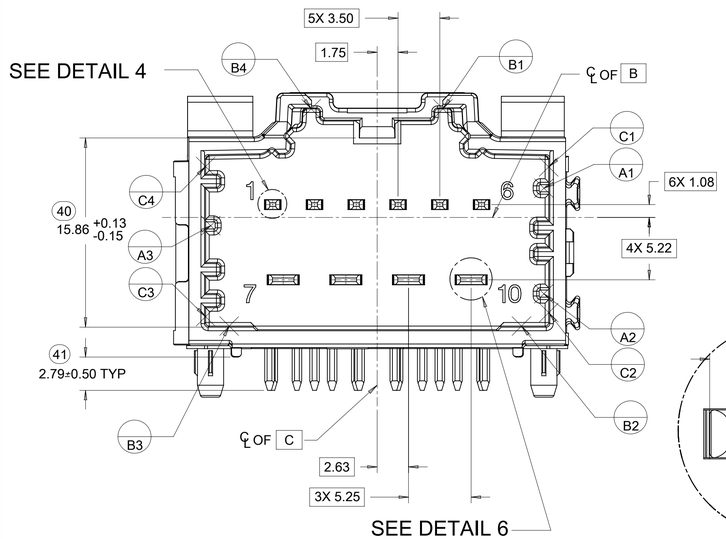

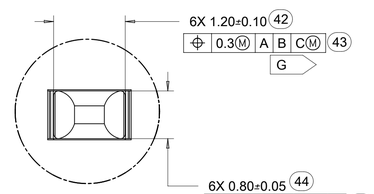

DETAIL 4
SCALE 20:1

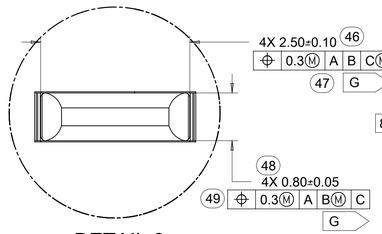

DETAIL 6
SCALE 20:1

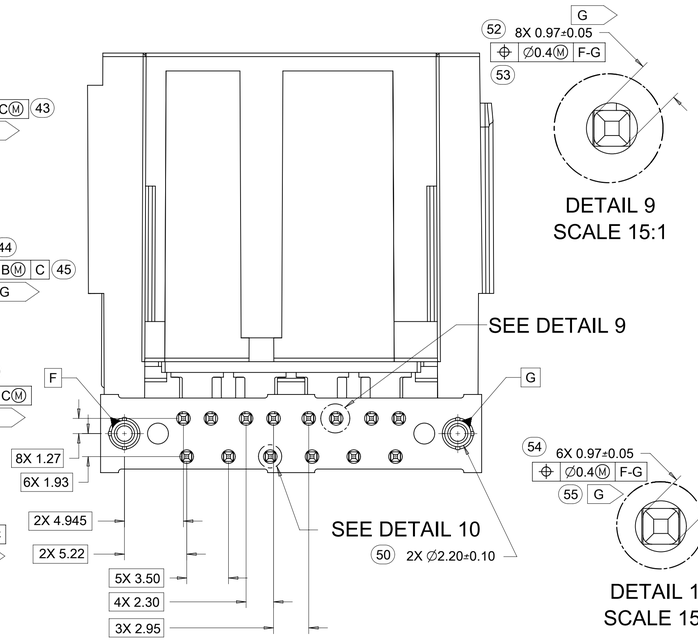

DETAIL 9
SCALE 15:1

DETAIL 10
SCALE 15:1

QUALITY SYMBOLS		
E/A	=	0
E/C	=	0
E/P	=	0
▼	=	0
C	=	0
☒	=	0
■	=	0
G	=	0

THIS DRAWING CONTAINS INFORMATION THAT IS PROPRIETARY TO MOLEX ELECTRONIC TECHNOLOGIES, LLC AND SHOULD NOT BE USED WITHOUT WRITTEN PERMISSION

EC NO: 612618 — DRWN: SHANDITHAVAL 2019/02/22 — CHK'D: RBAUMAN 2019/02/23 — APPR: RBAUMAN 2019/02/23

REV: Y1

GENERAL TOLERANCES (UNLESS SPECIFIED)

ANGULAR TOL ±	1.0 °
4 PLACES	±
3 PLACES	±
2 PLACES	± 0.13
1 PLACE	± 0.25
0 PLACES	±

DRAFT WHERE APPLICABLE MUST REMAIN WITHIN DIMENSIONS

DIMENSION UNITS	mm
SCALE	4:1
DRWN BY	MBAILEY
DATE	2008/08/14
CHK'D BY	CDILLON
DATE	2009/02/17
APPR BY	SMARCEAU
DATE	2008/08/14
DRAWING SIZE	D
THIRD ANGLE PROJECTION	

molex®

2-BAY STAC64 RIGHT ANGLE HEADER ASSEMBLY SALES DRAWING

PRODUCT CUSTOMER DRAWING

SERIES	MATERIAL NUMBER	CUSTOMER
34708	SEE CHART	GENERAL MARKET

DOCUMENT NUMBER	DOC TYPE	DOC PART	SHEET NUMBER
SD-34708-200	PSD	001	5 OF 6

RELEASE STATUS	P1	RELEASE DATE	2019/02/23 23:33:00

Created with Molex Expert!
REVISION: 01
DATE: 2011/10/24

10 CKT HYBRID TEMPLATE PCB LAYOUT

HEADER TO PCB
CONTACT REGION
(2 PLACES)

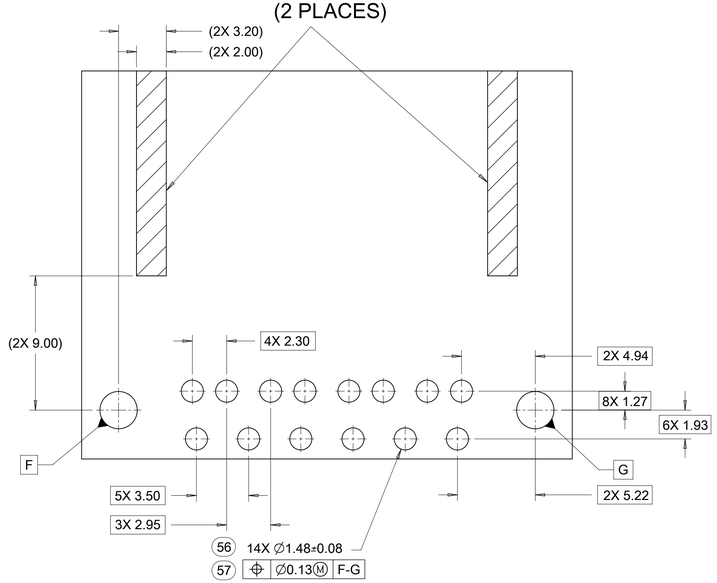

SCALE 5:1

8-20 CKT STAC64 TEMPLATE PCB LAYOUT

HEADER TO PCB
CONTACT REGION
(2 PLACES)

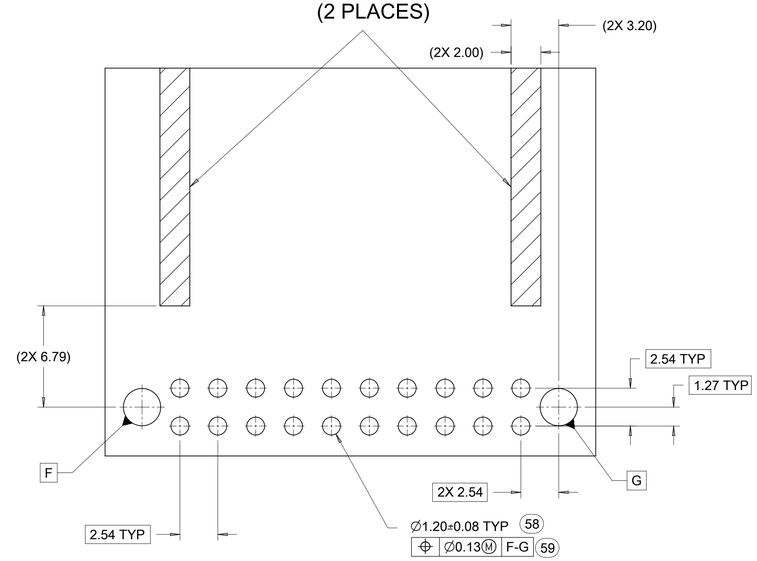

SCALE 5:1

14 CKT HYBRID TEMPLATE PCB LAYOUT

HEADER TO PCB
CONTACT REGION
(2 PLACES)

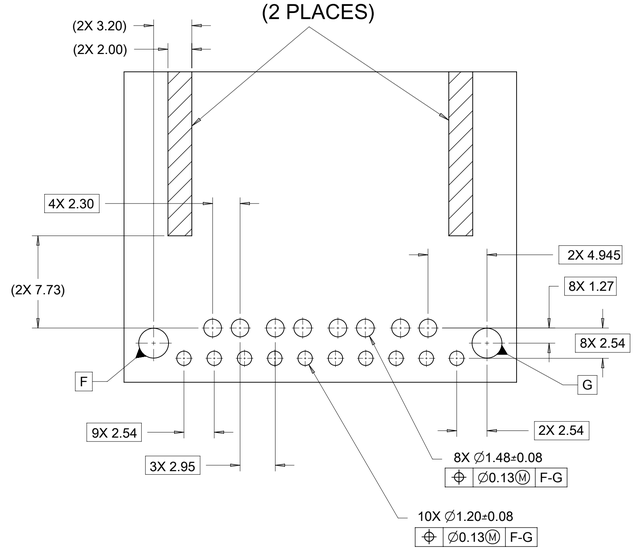

RELEASE STATUS	P1	RELEASE DATE	2019/02/23 23:33:00

QUALITY SYMBOLS
F = 0
E = 0
P = 0
= 0
C = 0
= 0
= 0
= 0

THIS DRAWING CONTAINS INFORMATION THAT IS PROPRIETARY TO MOLEX ELECTRONIC TECHNOLOGIES, LLC AND SHOULD NOT BE USED WITHOUT WRITTEN PERMISSION

EC NO: 612618 2019/02/22
DRWN: SHANDITHAVAL 2019/02/23
CHK'D: RBAUMAN 2019/02/23
APPR: RBAUMAN
REV Y1

GENERAL TOLERANCES (UNLESS SPECIFIED)
ANGULAR TOL ± 1.0 °
4 PLACES ±
3 PLACES ±
2 PLACES ± 0.13
1 PLACE ± 0.25
0 PLACES ±
DRAFT WHERE APPLICABLE MUST REMAIN WITHIN DIMENSIONS

DIMENSION UNITS: mm
SCALE: 4:1
DRWN BY: MBAILEY DATE: 2008/08/14
CHK'D BY: CDILLON DATE: 2009/02/17
APPR BY: SMARCEAU DATE: 2008/08/14
DRAWING SIZE: D
THIRD ANGLE PROJECTION

molex®

2-BAY STAC64 RIGHT ANGLE
HEADER ASSEMBLY SALES DRAWING

PRODUCT CUSTOMER DRAWING

SERIES	MATERIAL NUMBER	CUSTOMER
34708	SEE CHART	GENERAL MARKET

DOCUMENT NUMBER	DOC TYPE	DOC PART	SHEET NUMBER
SD-34708-200	PSD	001	6 OF 6