Kinghelm®

| RoHS | Compliant | Pb | HF |
|---|---|---|---|

| REV. | ECN NO. | DESCRIPTION | DRWN | APPD | DATE |
|---|---|---|---|---|---|
| | | | | | |
| | | | | | |

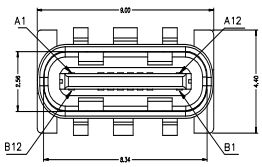


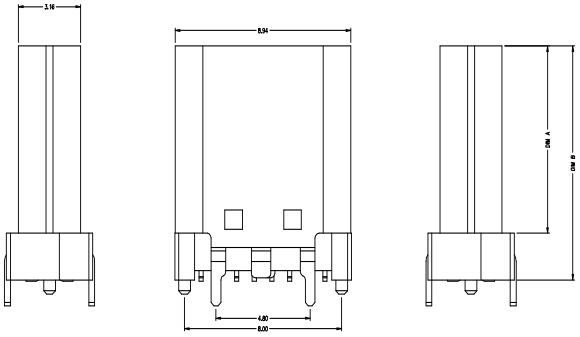


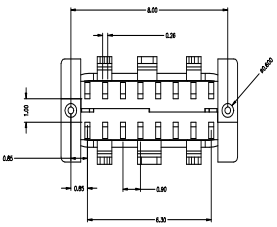


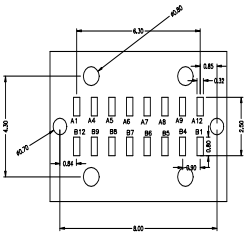


RECOMMENDED P.C.B. LAYOUT
TOLERANCE UNSPECIFIED ±0.05mm

NOTES:

1.MATERIAL:
MOLDING: LCP UL94 V-0
CONTACT: COPPER ALLOY.
GOLD PLATED ON CONTACT AREA, 100u"
Min TIN (LEAD FREE) ON SOLDER AREA,
SHELL: SUS304-H, T=0.30±0.03mm
50u" NICKEL PLATING OVER ALL.
SHILD: SUS304-H, T=0.12±0.03mm

2.MECHANICAL:
INSERTION: 5~20N.
EXTRACTION: 8~20N.
DURABILITY: 10000 CYCLES

3.ELECTRICAL:
CURRENT: 5A MIN FOR VBUS; 1.25A FOR GND PIN;
0.25A MIN FOR OTHER.
VOLTAGE: 20VAC MAX
WITHSTANDING VOLTAGE: 100V AC.
CONTACT RESISTANCE: 40mΩ MAX.
INSULATION RESISTANCE: 100MΩ MIN.

4.ENVIRONMENTAL
TEMPERATURE RANGE -55℃ ~ +85℃

5. UCF-078C X X C X - 1 X

HOUSING MATERIAL
1=PBT
2=LCP

HOUSING COLOR
B=BLACK
W=WHITE

CONTACT PLATING
01=G/F
02=PLATED GOLD 3u"

PACKAGE TYPE

| | | | | |
|---|---|---|---|---|
| DIM A | 8.50 | 8.00 | 7.30 | 6.80 |
| DIM B | 10.50 | 10.00 | 9.30 | 8.80 |
| NO. | 1 | 2 | 3 | 4 |

| PIN | A1 | | | A4 | A5 | A6 | A7 | A8 | A9 | | | A12 |
|---|---|---|---|---|---|---|---|---|---|---|---|---|
| Signal Name | GND | | | Vbus | CC1 | Dp1 | Dn1 | SUB1 | Vbus | | | GND |
| PIN | B12 | | | B9 | B8 | B7 | B6 | B5 | B4 | | | B1 |
| Signal Name | GND | | | Vbus | SBU2 | Dn2 | Dp2 | CC2 | Vbus | | | GND |

GENERAL TOLERANCE:
0. ±0.38
0.0 ±0.25
0.00 ±0.15
0.0° ±2°

DATE: 2019.11.21
DR.: Jeff Chen
CHK.: TonyYang
APPD.:

深圳市金航标电子有限公司
WWW.BDS666.COM
KH-TYPE-C-L9.3-16P-STM
0755-83044319

TITLE: USB C TYPE 16p smt LT F
REV.: A0
SHEET: 1of1
PART NO.: See Notes
UNITS: mm
SCALE: 1:1
SIZE: A4