Specifications:
规格：
Voltage rating:250V AC/DC
额定电压：250V AC/DC
Current rating:3A AC/DC
额定电流：3A AC/DC
Withstanding voltage:1500V AC/minute
耐受电压:1500V AC/分钟
Temperature range:-25℃-+85℃
温度范围：-25℃-+85℃
Insulation resistance:≥1000MΩ
绝缘电阻：≥1000MΩ
Contact resistance:≤20mΩ
接触电阻：≤20mΩ
After environmental testing:≤30mΩ
环境测试后：≤30兆欧
Max.Processing Temp:240℃ for30-60seconds
（260℃ for10seconds）

X9555 W V S-2xXX A-6T V01 XX
① ②③④ ⑤ ⑥⑦ ⑧ ⑨

1.Series No
2.Category:W-WAFER
3.Welding Board Angle:V-Straight 180°
4.Welding Way:S-SMT
5.Row No-Pin No:2xXX-2x06P-2x64P
6.Plug the Pin&Special N0:A-Ejector Header
7.Material:6T-PA6T 94V-0
8.Plating Category:V01-All Gold Flash
9.Color:Blank-Natural Color

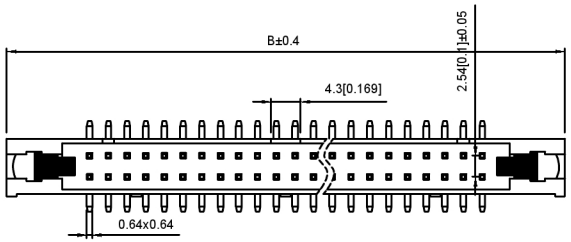

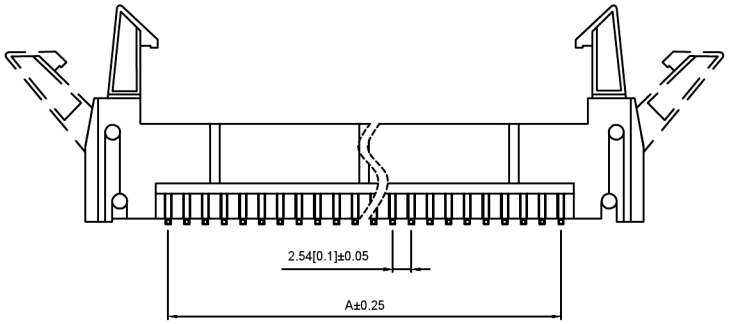

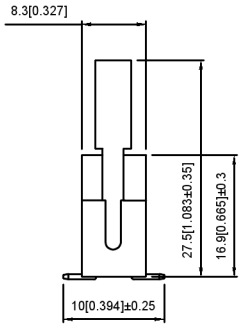

poles	Dimensions(mm)		poles	Dimensions(mm)	
	A	B		A	B
2x03	5.08	26.82	2x13	30.48	52.22
2x04	7.60	29.36	2x15	35.56	57.30
2x05	10.16	31.90	2x17	40.64	62.38
2x07	15.24	36.98	2x20	48.26	70.00
2x08	17.78	39.52	2x25	60.96	82.70
2x10	22.86	44.60	2x30	73.66	95.40
2x12	27.94	49.68	2x32	78.74	100.48

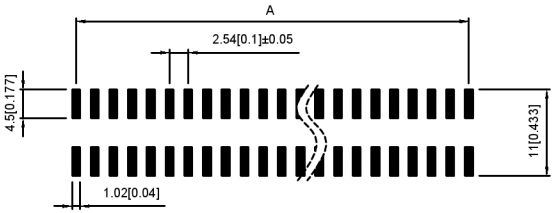

PCB Hole Layout

X9555WVS-2xXXA-6TV01	LCP UL 94V-0	Brass	Gold-Flash	X9555H
PART NO	Material	Material(pin)	Finish(Pin)	Suitable XKB Terminal

广东星坤科技股份有限公司
文件工程章

MARK	DESCRIPTION	DATE	REVISED	APPROVED
ΔX				
ΔX				
ΔX				

REVISIONS

www.xk-dg.cn www.helloxkb.com www.helloxkb.cn

units:	mm
tolerance:	
X.X	±0.2mm
X.XX	±0.1mm
X.XXX	±0.05mm

UNSPECIFIED TOLERANCES

DSND		DATE		SCALE: N/A
DWN		DATE		VIEW:
CHKD		DATE		UNIT: mm/in
APPD		DATE		SIZE: A4

XKB INDUSTRIAL PRECISION CO.,LIMITED

MODEL TYPE: Wire to board connector
PART NO.: 2.54mm Crimp Style Connectors
DWG NO.: X9555WVS-2xXXA-6TV01

WEIGHT	SHEET	REVISION
1.0g	1/1	A0