Contacts	Cable Jacket	Cable OD	AWG	Item No.
5 Pin	PUR	4.4	22	LMI2A-05BMMM-SL8BXX
4 Pin		4.0		LMI2A-04BMMM-SL8BXX
3 Pin		3.8		LMI2A-03BMMM-SL8BXX

REV.	ECN NO.	DATE	SIGN	DESCRIPTION
B	C210726	2021-05-07	Sam Ho	B XI
C	C211248	2021-08-17	Sam Ho	C XI
D	C211529	2021-10-07	Sam Ho	D XI

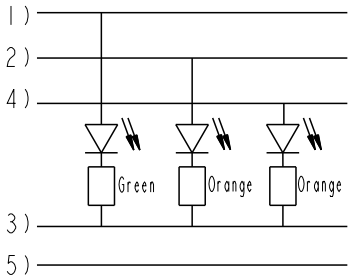

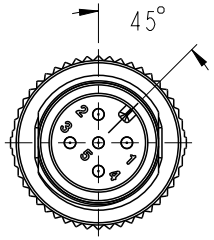

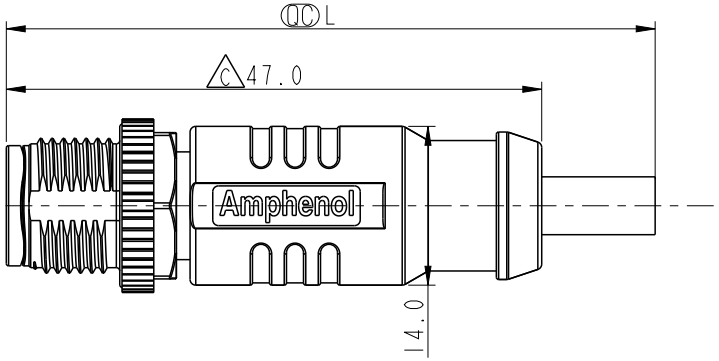

D Note:
* QC Important Dimension
* Waterproof Rate: IPX8, Mated 1m/24h
* Connector
  Housing: Thermoplastic, Black
  Pin: Copper Alloy, Gold Plated
  Nut: Metal
B Outer Mold: Thermoplastic, Transparent Black.
* Cable: UL20549, PUR Jacket, Black
* Cable Length Tolerance:

1M	+50/-0 mm
1M < L ≦ 3M	+100/-0 mm
3M < L ≦ 5M	+150/-0 mm
5M < L ≦ 10M	±100 mm
10M < L ≦ 20M	±200 mm
20M < L ≦ 30M	±300 mm
30M < L ≦ 99M	±500 mm

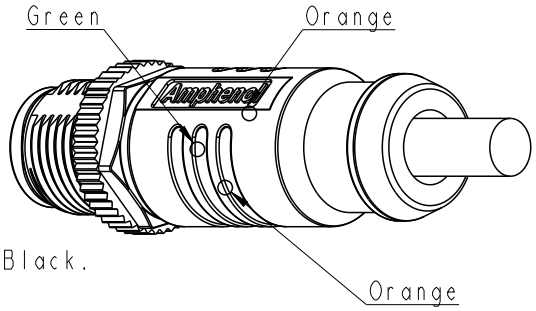

LMI2A- XX BMMM-SL8B XX

No. Of Pin

XX:L=0~99Meters
01:L=1Meters
02:L=2Meters
:
99:L=99Meters

Pin #	Wire	Pin #	Wire	Pin #	Wire
5 - -		5 - -		5 Gray	灰
4 Black	黑	4 Black	黑	4 Black	黑
3 Blue	藍	3 Blue	藍	3 Blue	藍
2 - -		2 White	白	2 White	白
1 Brown	棕	1 Brown	棕	1 Brown	棕

Pin Out

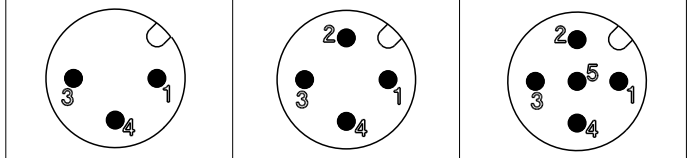

Pin Assignments Front View

UNIT: mm

TOLERANCE
±0.50mm

TITLE: M12 A Type 180° Male Cable With LED

SCALE 3:2 | SIZE A4 | SHEET 1 OF 1

REV. D | WC-REV.

QC: Inspection item

Amphenol LTW
安費諾亮泰企業股份有限公司

ITEM NO	DRAWN BY: Sam Ho	DATE: 2021-03-03
DWG NO: LMI2A-XXBMMM-SL8BXX	CHECKED BY: Fred Lee	DATE: 2021-03-03
CUSTOMER: ALTW	APPROVED BY: Fred Lee	DATE: 2021-03-03

THIS DOCUMENT IS SUBJECT TO CHANGE WITHOUT NOTICE. IT IS CONFIDENTIAL AND A PROPERTY OF Amphenol LTW. DISCLOSURE TO THIRD PARTY HAS TO BE AUTHORIZED BY Amphenol LTW.